ENGINE LUBRICATION & COOLING SYSTEMS

SECTION LC

LC

CONTENTS

PRECAUTION 2
PREPARATION 3

GA

ENGINE LUBRICATION SYSTEM 5
Lubrication Circuit 5
Oil Pressure Check 6
Oil Pump 7
ENGINE COOLING SYSTEM 9
Cooling Circuit 9
Water Hose Drawing 10
System Check 12
Water Pump 13
Thermostat 14
Water Outlet 15
Radiator 16

SR

ENGINE LUBRICATION SYSTEM 17
Lubrication Circuit 17
Oil Pressure Check 17
Oil Pump 18
Oil Filter 20
ENGINE COOLING SYSTEM 21
Cooling Circuit 21
System Check 21
Cooling System Inspection 21
Water Pump 22
Thermostat 23
Water Outlet 24
Radiator 25

CD

ENGINE LUBRICATION SYSTEM 26
Lubrication Circuit 26
Oil Pressure Check 27
Oil Pump 27
Oil Cooler 30
ENGINE COOLING SYSTEM 31
Cooling Circuit 31
System Check 32
Water Pump 33
Thermostat 34
Radiator 35

GA, SR, CD

ENGINE COOLING SYSTEM 37
Radiator (Aluminum type) 37

GA, SR

SERVICE DATA AND SPECIFICATIONS (SDS) 40
Engine Lubrication System (GA) 40
Engine Cooling System (GA) 40
Engine Lubrication System (SR) 40
Engine Cooling System (SR) 40

CD

SERVICE DATA AND SPECIFICATIONS (SDS) 41
Engine Lubrication System 41
Engine Cooling System 41

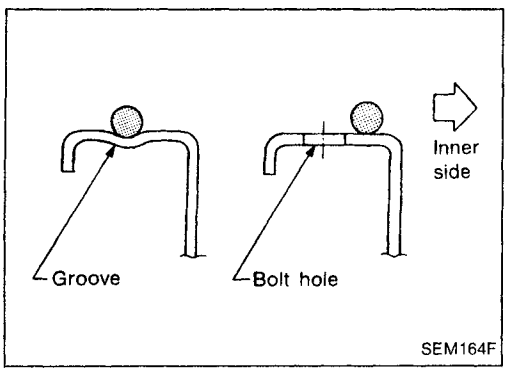

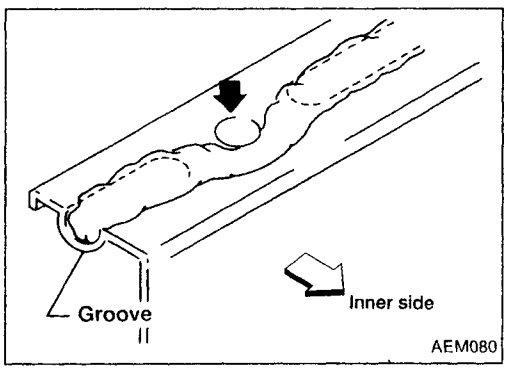

LIQUID GASKET APPLICATION PROCEDURE

a. Use a scraper to remove all traces of old liquid gasket from mating surfaces and grooves. Also, completely clean any oil from these areas.
b. Apply a continuous bead of liquid gasket to mating surfaces. (Use Genuine Liquid Gasket or equivalent.)
   - For oil pan, be sure liquid gasket diameter is 4.0 to 5.0 mm (0.157 to 0.197 in) for SR engine and 3.5 to 4.5 mm (0.138 to 0.177 in) except for SR engine.
   - For areas except oil pan, be sure liquid gasket diameter is 2.0 to 3.0 mm (0.079 to 0.118 in).
c. Apply liquid gasket to inner sealing surface around hole perimeter area.
   (Assembly should be done within 5 minutes after coating.)
d. Wait at least 30 minutes before refilling engine oil and engine coolant.

SPECIAL SERVICE TOOLS

The actual shapes of Kent-Moore tools may differ from those of special service tools illustrated here.

Tool number Tool name	Description		Engine application		
			GA	SR	CD
ST25051001* Oil pressure gauge	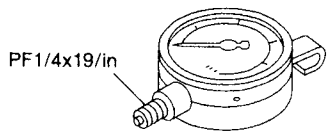 NT558	Measuring oil pressure **Maximum measuring range: 2,452 kPa (24.5 bar, 25 kg/cm^2, 356 psi)**	X	X	X
ST25052000* Hose	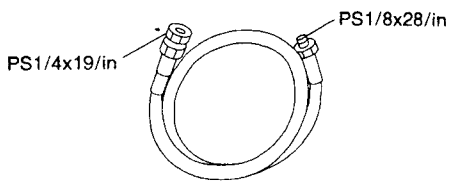 NT559	Adapting oil pressure gauge to cylinder block	X	X	X
KV10115801 KV10115800 (Kent-Moore Europe make) Oil filter wrench	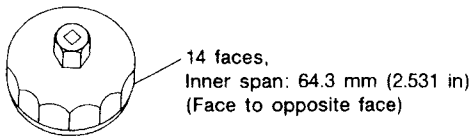 NT362	Removing oil filter	—	X	—
KV10105900 Oil filter wrench	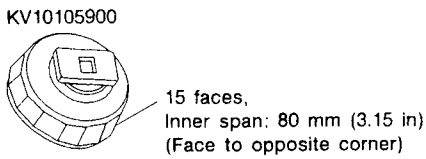 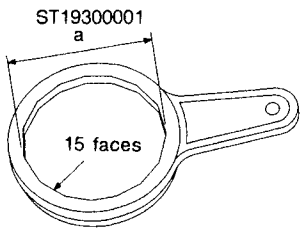 NT638	Removing oil filter **a: 78 mm (3.07 in) (Face to opposite corner)**	X	—	X
WS39930000 Tube presser	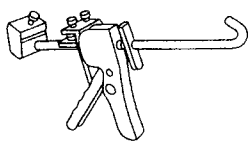 NT052	Pressing the tube of liquid gasket	X	X	X

*: Special tool or commercial equivalent

Tool number Tool name	Description		Engine application		
			GA	SR	CD
EG17650301 Radiator cap tester adapter	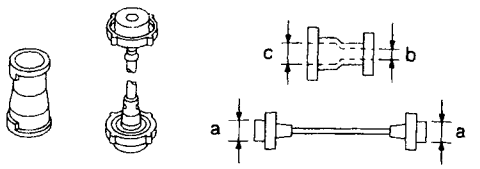 NT564	Adapting radiator cap tester to radiator filler neck **a: 28 (1.10) dia.** **b: 31.4 (1.236) dia.** **c: 41.3 (1.626) dia.** Unit: mm (in)	X	X	X
KV99103510 Radiator plate pliers A	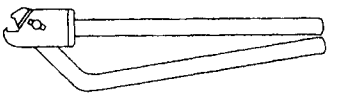 NT224	Installing radiator upper and lower tanks	X	X	X
KV99103520 Radiator plate pliers B	 NT225	Removing radiator upper and lower tanks	X	X	X

Lubrication Circuit

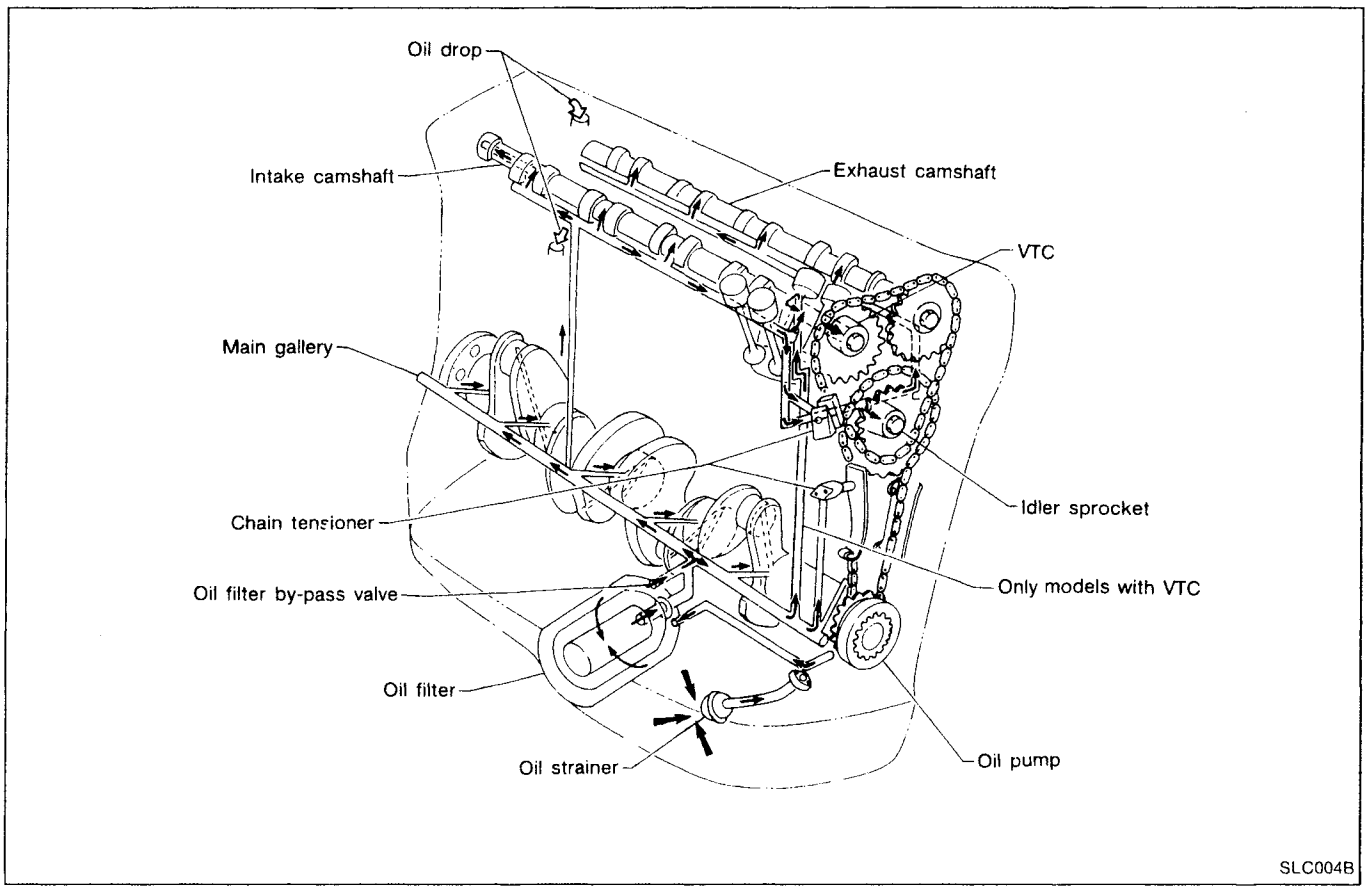

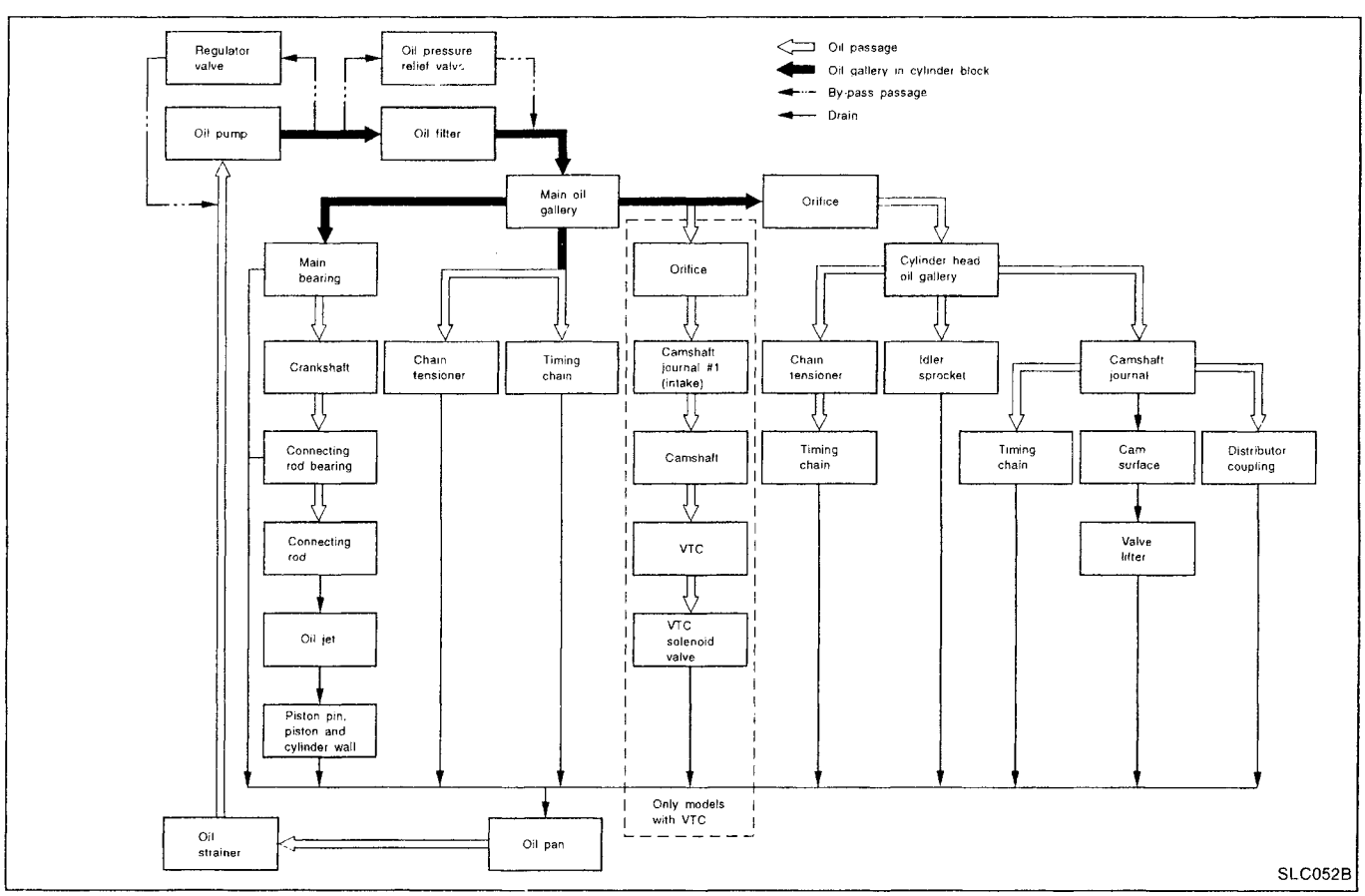

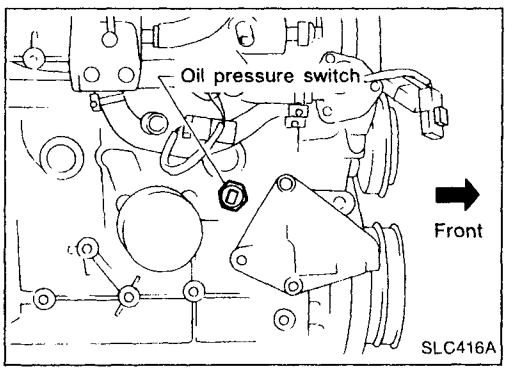

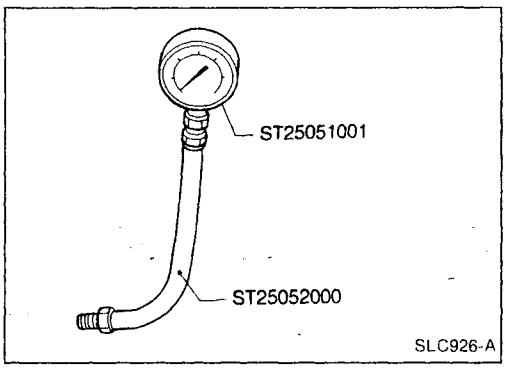

Oil Pressure Check

WARNING:

- **Be careful not to burn yourself, as the engine and oil may be hot.**
- **Oil pressure check should be done in "Neutral" gear position.**

1. Check oil level.
2. Remove oil pressure switch.

Engine speed rpm	Approximate discharge pressure kPa (bar, kg/cm^2, psi)
Idle speed	More than 59 (0.59, 0.6, 9)
2,000	More than 245 (2.45, 2.5, 36)
6,000	More than 422 (4.22, 4.3, 61)

3. Install pressure gauge.
4. Start engine and warm it up to normal operating temperature.
5. Check oil pressure with engine running under no-load.

If difference is extreme, check oil passage and oil pump for oil leaks.

6. Install oil pressure switch with sealant.

Oil Pump

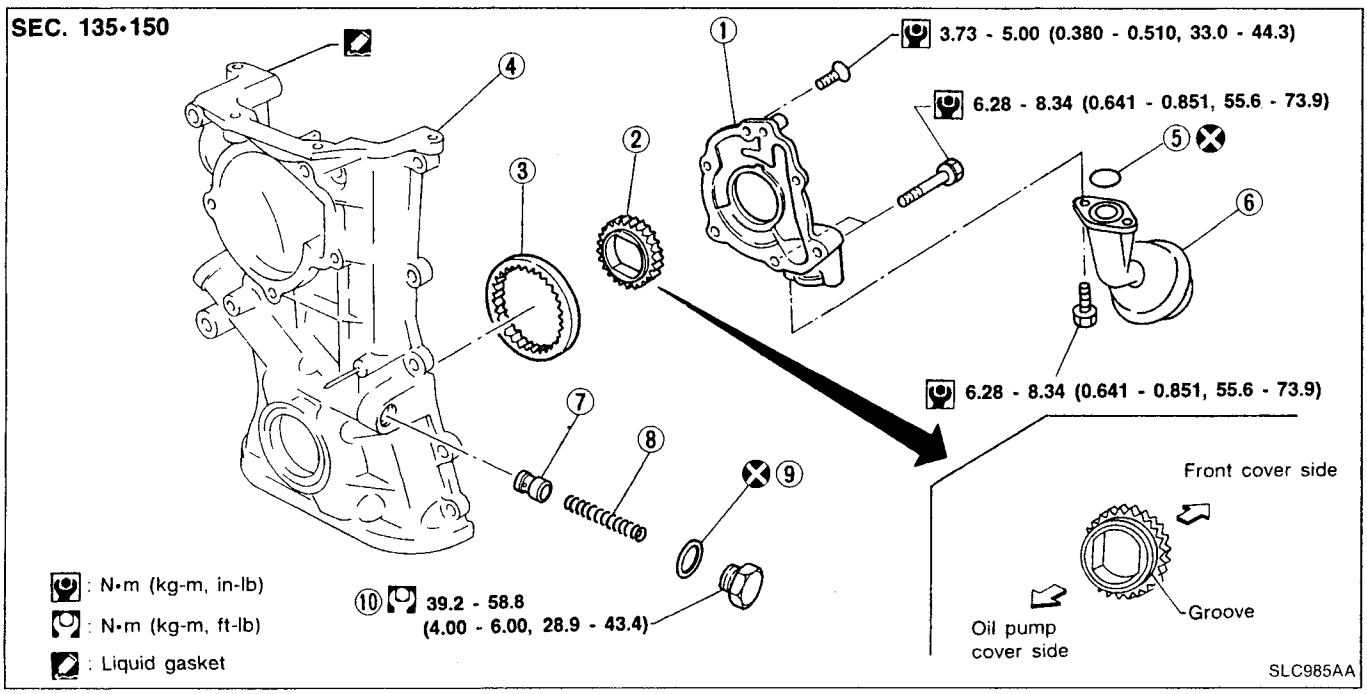

① Oil pump cover
② Inner gear
③ Outer gear
④ Front cover
⑤ O-ring
⑥ Oil strainer
⑦ Regulator valve
⑧ Spring
⑨ Washer
⑩ Plug

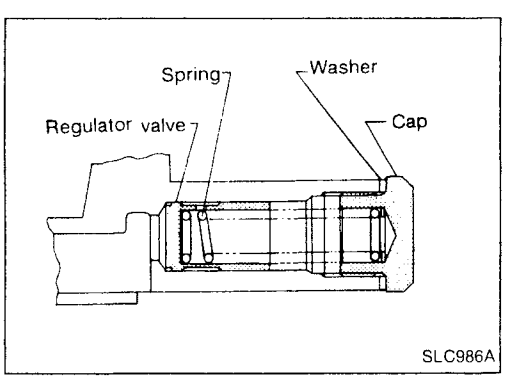

REGULATOR VALVE INSPECTION

1. Visually inspect components for wear and damage.
2. Check oil pressure regulator valve sliding surface and valve spring.
3. Coat regulator valve with engine oil. Check that it falls freely into the valve hole by its own weight.

If damaged, replace regulator valve set or oil pump assembly.

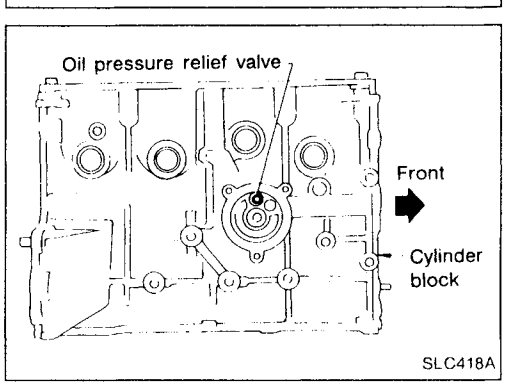

OIL PRESSURE RELIEF VALVE INSPECTION

Inspect oil pressure relief valve for movement, cracks and breaks by pushing the ball. If replacement is necessary, remove valve by prying it out with suitable tool.
Install a new valve in place by tapping it.

Oil Pump (Cont'd)

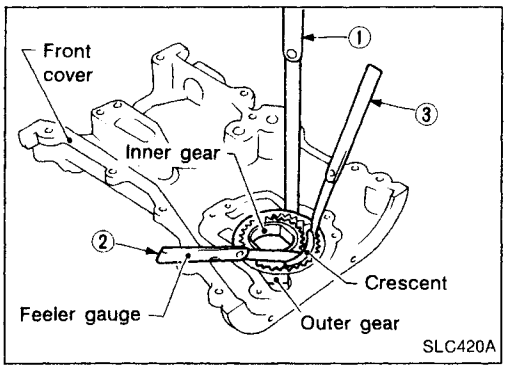

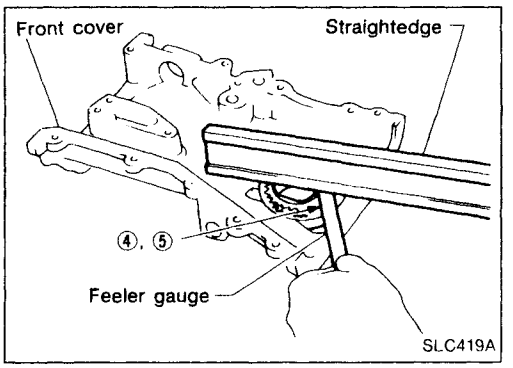

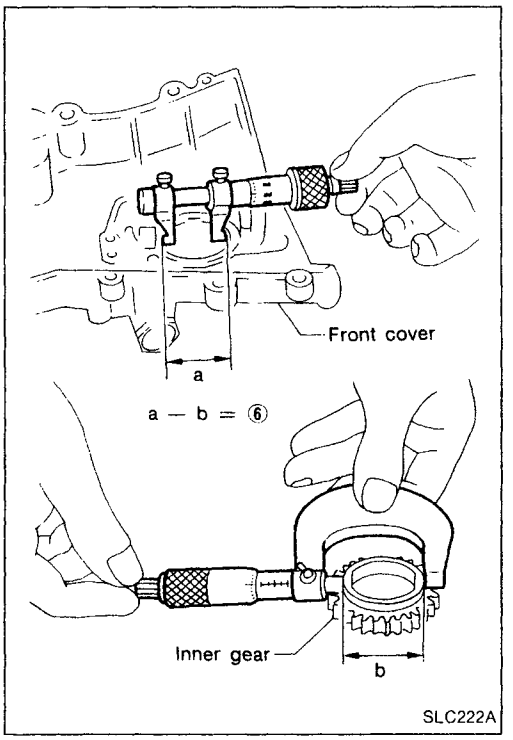

DISASSEMBLY AND ASSEMBLY

- **Always replace oil seal with a new one.**
- **When installing oil pump, apply engine oil to gears.**
- **Make sure that O-ring is fitted properly.**

OIL PUMP INSPECTION

Using a feeler gauge, check the following clearance.

Unit: mm (in)

Body to outer gear clearance ①	0.110 - 0.200 (0.0043 - 0.0079)
Inner gear to crescent clearance ②	0.217 - 0.327 (0.0085 - 0.0129)
Outer gear to crescent clearance ③	0.21 - 0.32 (0.0083 - 0.0126)
Body to inner gear clearance ④	0.05 - 0.09 (0.0020 - 0.0035)
Body to outer gear clearance ⑤	0.05 - 0.11 (0.0020 - 0.0043)
Inner gear to brazed portion of housing clearance ⑥	0.045 - 0.091 (0.0018 - 0.0036)

- **If the tip clearance (②) exceeds the limit, replace gear set.**
- **If body to gear clearances (①, ③, ④, ⑤, ⑥) exceed the limit, replace front cover assembly.**

Cooling Circuit

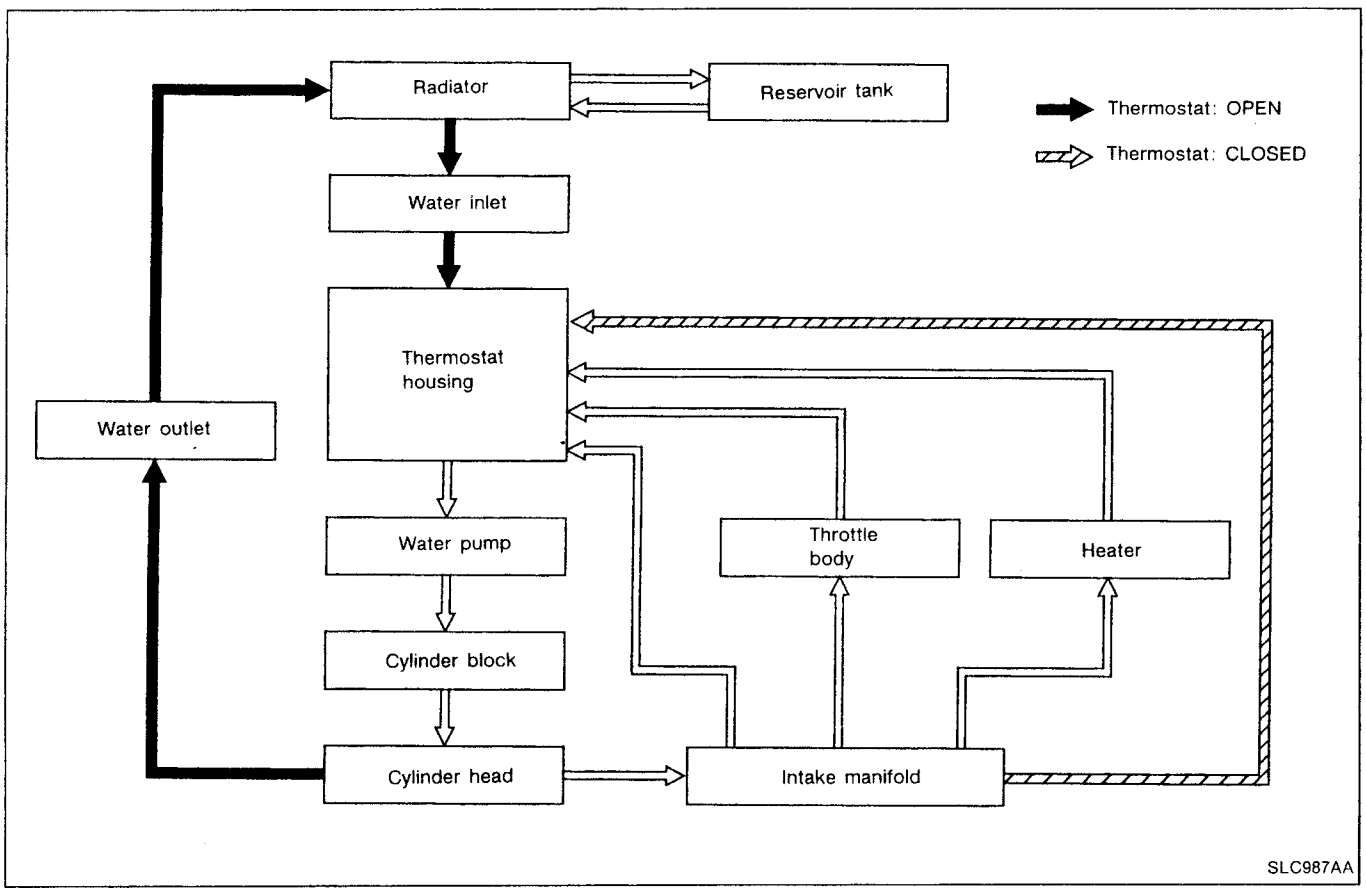

Water Hose Drawing

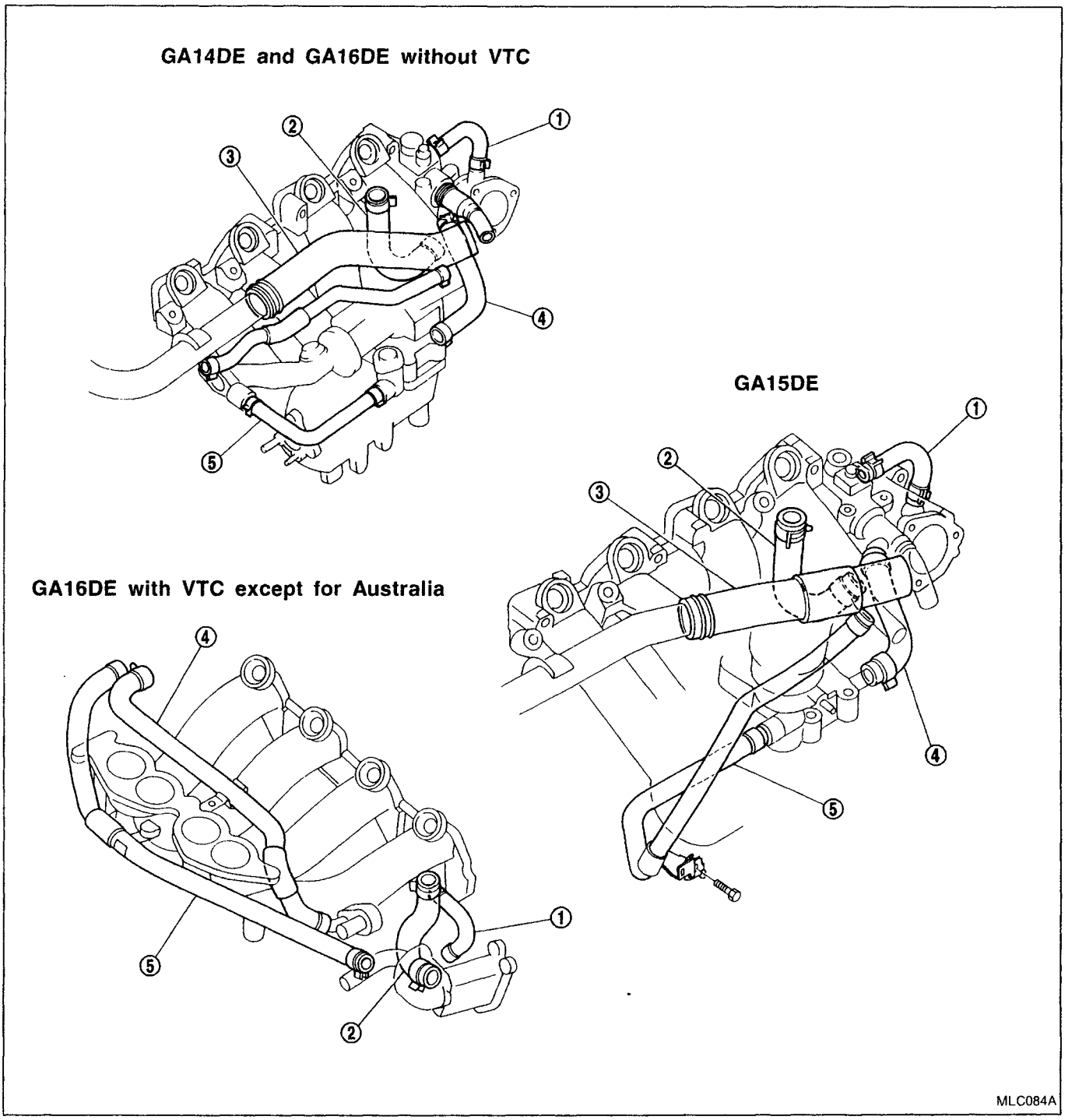

① Intake manifold to thermostat housing-1
② Intake manifold to thermostat housing-2
③ Radiator lower hose to water inlet
④ Intake manifold to throttle body
⑤ Throttle body to thermostat housing

Water Hose Drawing (Cont'd)

GA16DE with VTC for Australia

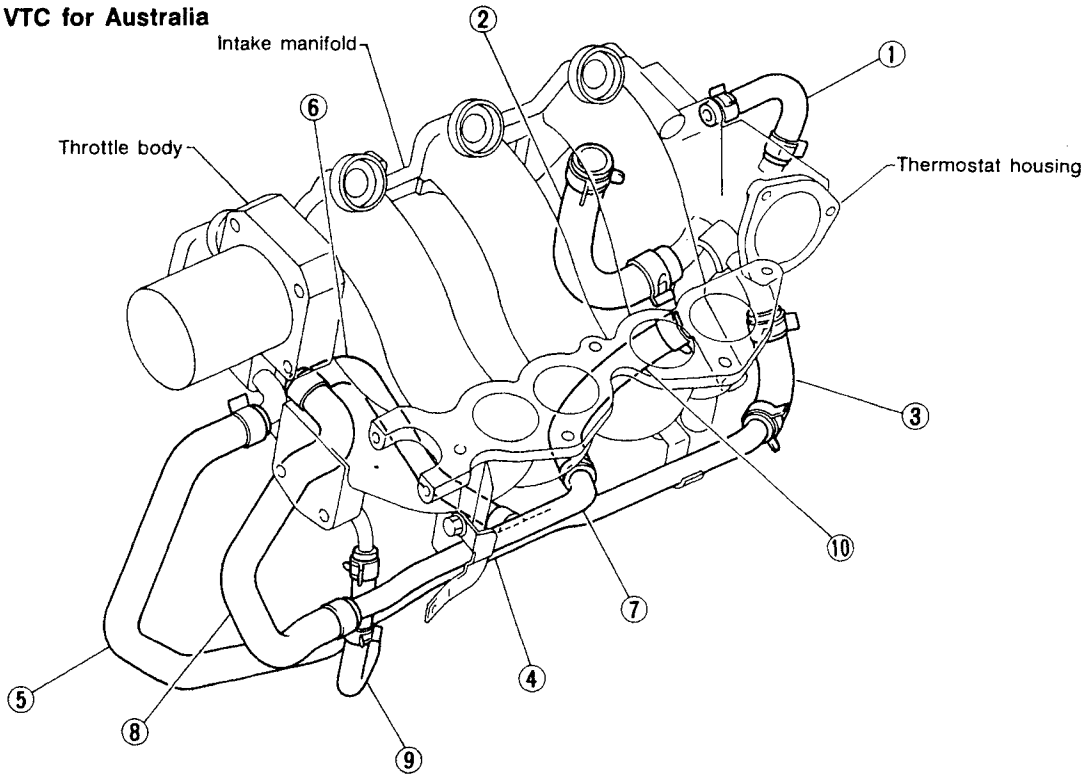

① Intake manifold to Thermostat housing (upper)
② Intake manifold to Thermostat housing (lower)
③ Water jacket to Water pipe lower
④ Water pipe lower
⑤ Water pipe lower to Throttle body
⑥ Water pipe lower to Intake manifold
⑦ Water pipe upper
⑧ Throttle body to Water pipe upper
⑨ Intake manifold to Water pipe upper
⑩ Water pipe upper to Thermostat housing

SLC021BA

LC

System Check

WARNING:
Never remove the radiator cap when the engine is hot; serious burns could be caused by high pressure fluid escaping from the radiator.
Wrap a thick cloth around cap and carefully loosen it a quarter turn to release built-up pressure. Then remove the cap completely.

CHECKING COOLING SYSTEM HOSES

Check hoses for improper attachment, leaks, cracks, damage, loose connections, chafing and deterioration.

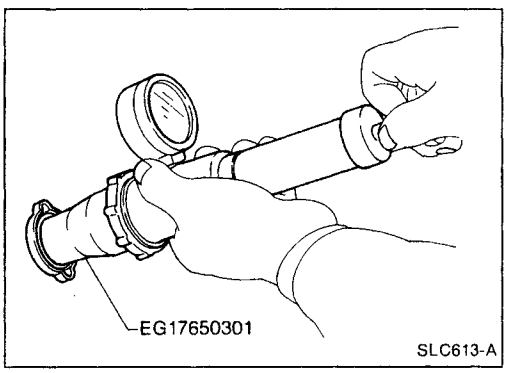

CHECKING RADIATOR CAP

To check radiator cap, apply pressure to cap with a tester.

Radiator cap relief pressure:
Standard
78 - 98 kPa
(0.78 - 0.98 bar, 0.8 - 1.0 kg/cm^2, 11 - 14 psi)
Limit
59 - 98 kPa
(0.59 - 0.98 bar, 0.6 - 1.0 kg/cm^2, 9 - 14 psi)

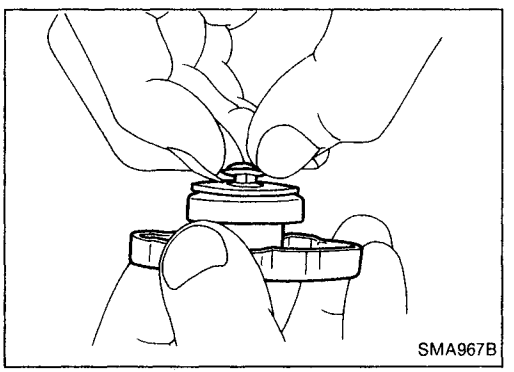

Pull the negative pressure valve to open it. Check that it closes completely when released.

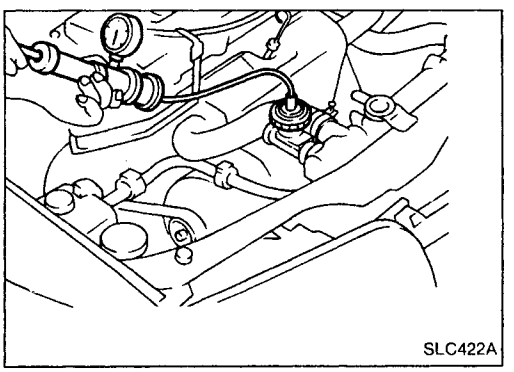

CHECKING COOLING SYSTEM FOR LEAKS

To check for leakage, apply pressure to the cooling system with a tester.

Testing pressure:
157 kPa (1.57 bar, 1.6 kg/cm^2, 23 psi)

CAUTION:
Higher than the specified pressure may cause radiator damage.

Water Pump

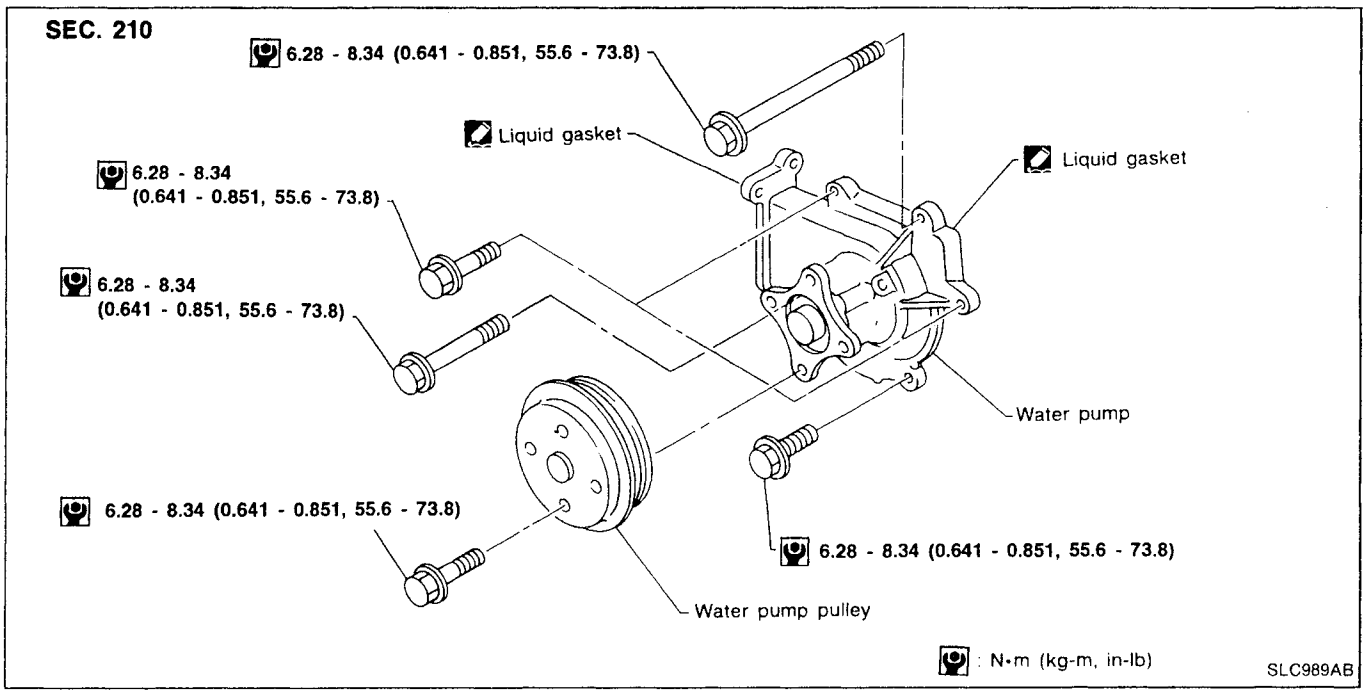

CAUTION:

- **When removing water pump assembly, be careful not to get coolant on timing chain.**
- **Water pump cannot be disassembled and should be replaced as a unit.**
- **After installing water pump, connect hose and clamp securely, then check for leaks using radiator cap tester.**

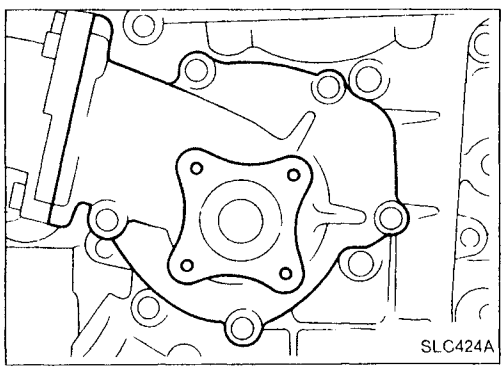

REMOVAL

1. Drain coolant from radiator and cylinder block.
2. Remove drive belts for compressor, power steering pump and alternator.
3. Remove water pump pulley.
4. Remove water pump.

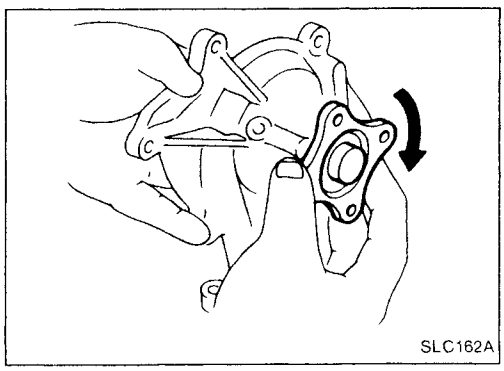

INSPECTION

1. Check body assembly for rust or corrosion.
2. Check for rough operation due to excessive end play.

Water Pump (Cont'd)

INSTALLATION

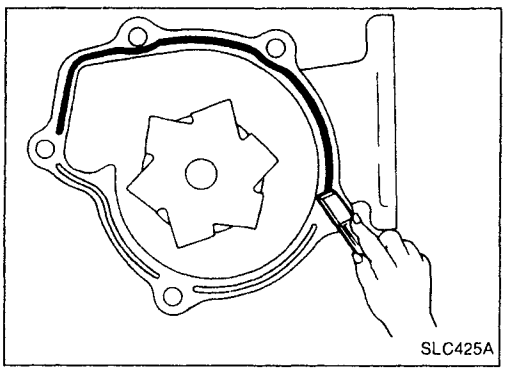

Use a scraper to remove liquid gasket from water pump.
Be sure liquid gasket in grooves is also removed.

- Remove liquid gasket from mating surface of front cover.
- Remove all traces of liquid gasket using white gasoline.

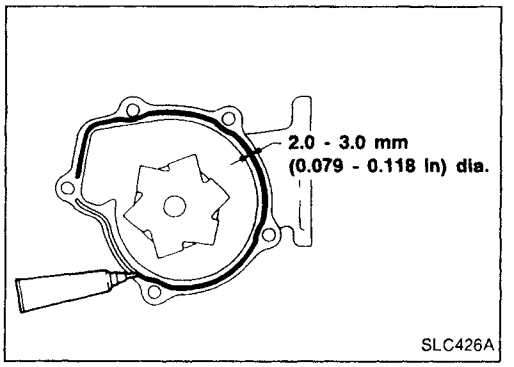

- Apply liquid gasket to mating surface of pump housing as shown.

Thermostat

INSPECTION

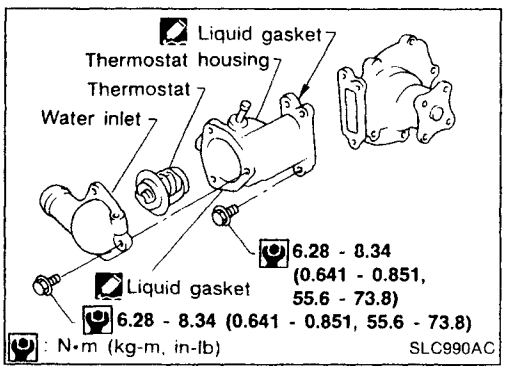

1. Check for valve seating condition at ordinary temperatures. It should seat tightly.

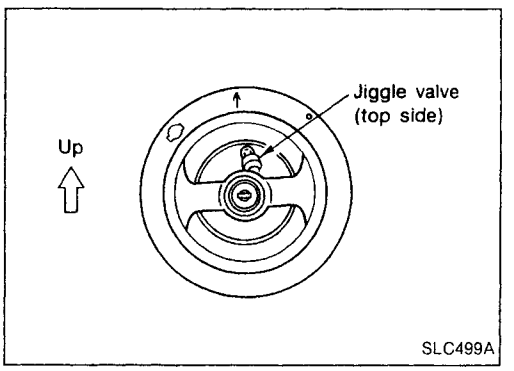

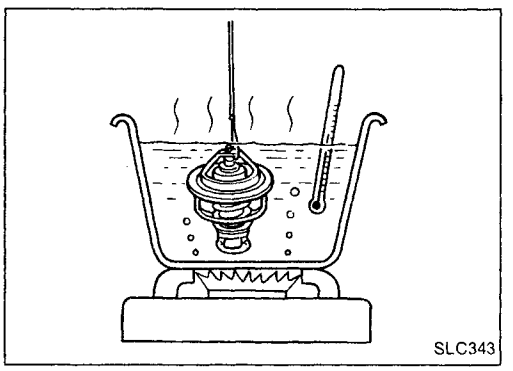

2. Check valve opening temperature and maximum valve lift.

Valve opening temperature	°C (°F)	76.5 (170)
Valve lift	mm/°C (in/°F)	More than 8/90 (0.31/194)

3. Then check if valve closes at 5°C (9°F) below valve opening temperature.

- **After installation, run engine for a few minutes, and check for leaks.**

Thermostat (Cont'd)

INSTALLATION

When installing water inlet apply liquid gasket as shown.

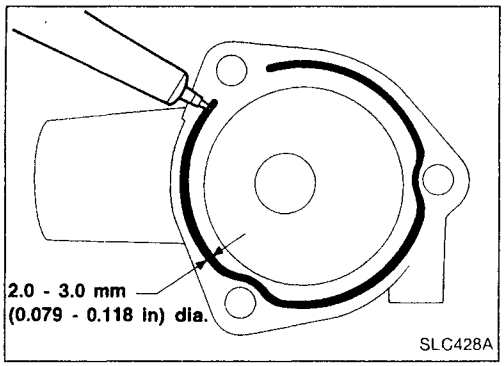

Water Outlet

INSPECTION

Visually inspect for water leaks. If there is leakage, apply liquid gasket.

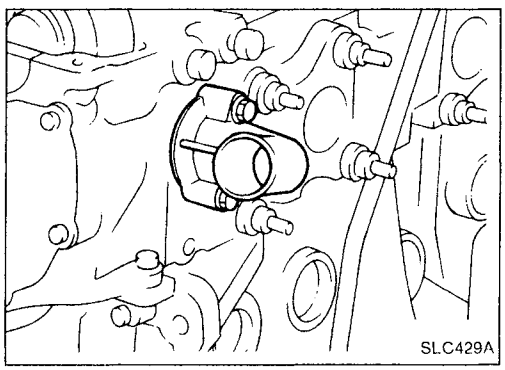

INSTALLATION

When installing water outlet, apply liquid gasket as shown.

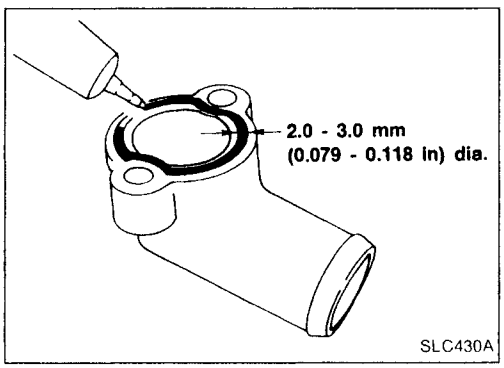

Radiator

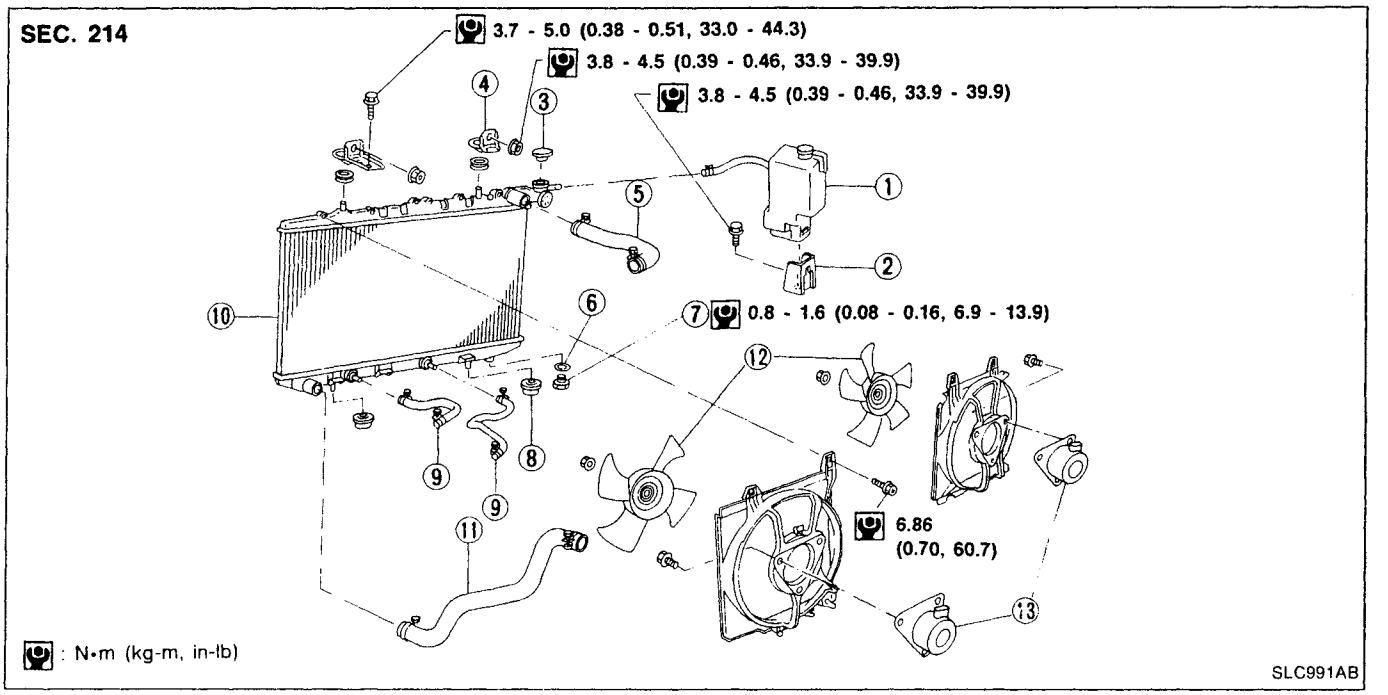

① Reservoir tank
② Reservoir tank bracket
③ Radiator cap
④ Mounting bracket
⑤ Upper hose
⑥ Washer
⑦ Drain plug
⑧ Mounting rubber
⑨ Oil cooler hose (A/T models)
⑩ Radiator
⑪ Lower hose
⑫ Cooling fan
⑬ Cooling fan motor

Cooling fan control system

- Cooling fans are controlled by the ECM. For details, refer to EC section ("Cooling Fan Control", "TROUBLE DIAGNOSES").

Refilling engine coolant

- For details on refilling engine coolant, refer to MA section ("REFILLING ENGINE COOLANT", "Changing Engine Coolant").

Lubrication Circuit

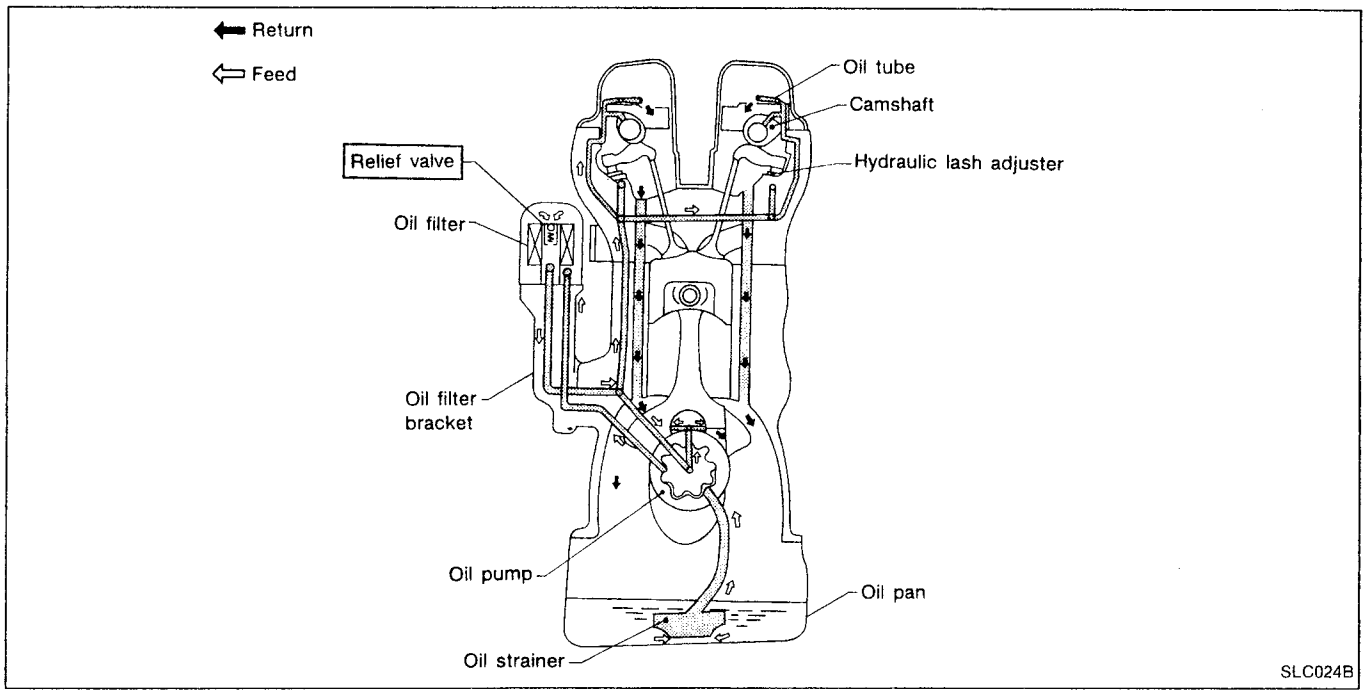

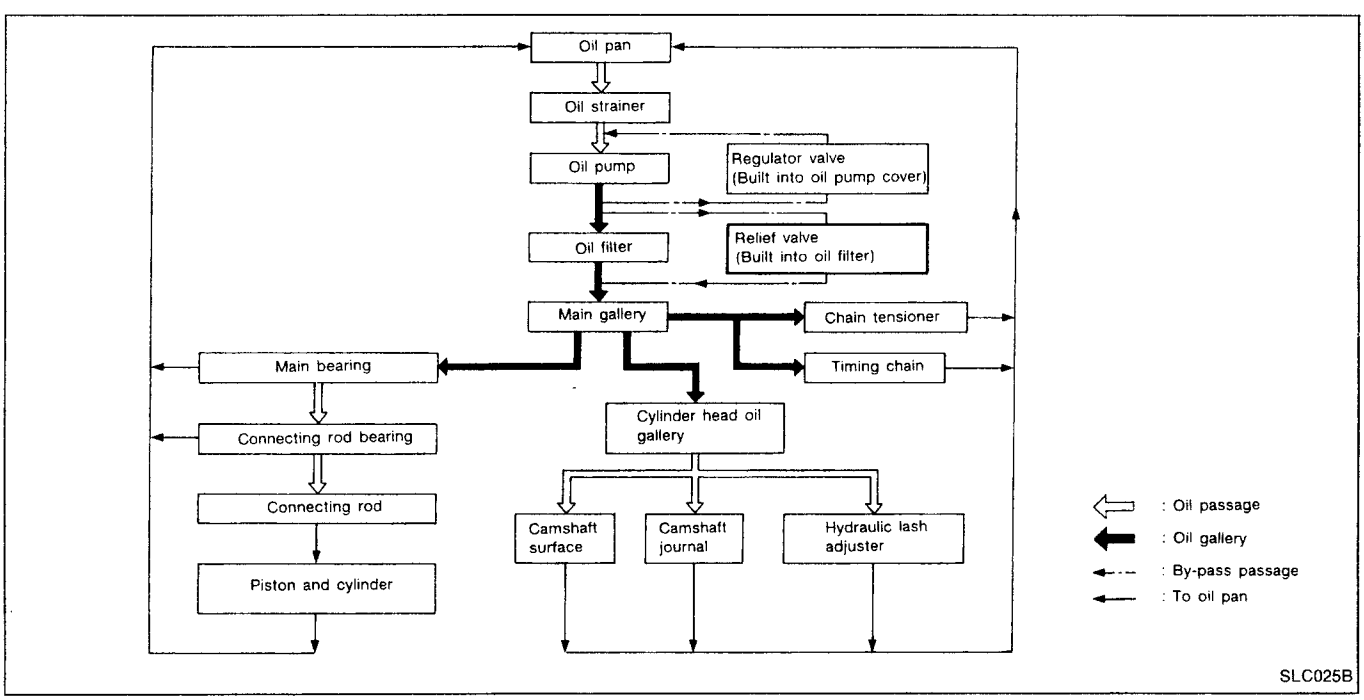

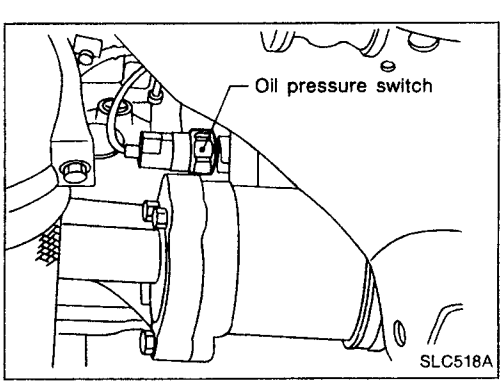

Oil Pressure Check

WARNING:

- **Be careful not to burn yourself, as the engine and oil may be hot.**
- **Oil pressure check should be done in "Neutral position".**

1. Check oil level.
2. Remove oil pressure switch.

Oil Pressure Check (Cont'd)

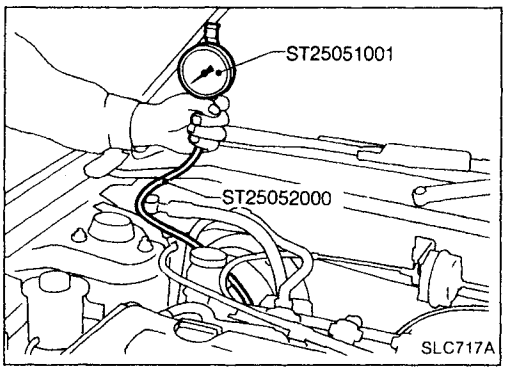

3. Install pressure gauge.
4. Start engine and warm it up to normal operating temperature.
5. Check oil pressure with engine running under no-load.

Engine speed rpm	Approximate discharge pressure kPa (bar, kg/cm^2, psi)
Idle speed	More than 78 (0.78, 0.8, 11)
3,200	314 - 392 (3.14 - 3.92, 3.2 - 4.0, 46 - 57)

If difference is extreme, check oil passage and oil pump for oil leaks.

6. Install oil pressure switch with sealant.

Oil Pump

REMOVAL

1. Remove drive belts.
2. Remove cylinder head. (Refer to EM section.)
3. Remove oil pans. (Refer to EM section.)
4. Remove oil strainer and baffle plate.
5. Remove front cover assembly.

DISASSEMBLY AND ASSEMBLY

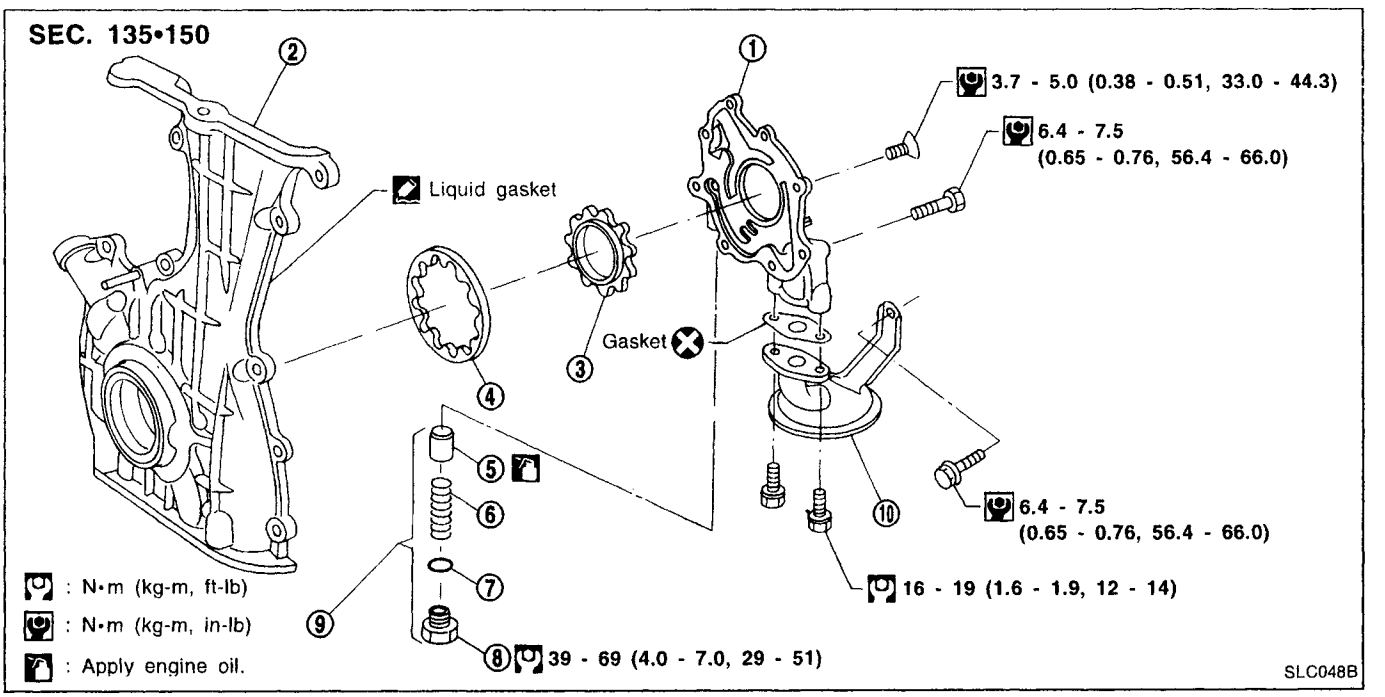

① Oil pump cover
② Front cover
③ Inner gear
④ Outer gear
⑤ Regulator valve
⑥ Spring
⑦ Shims
⑧ Plug
⑨ Regulator valve set
⑩ Oil strainer

- **Always replace oil seal, gasket and O-ring with new ones.**
- **When installing oil pump, apply engine oil to inner and outer gears.**
- **Be sure that O-rings are properly fitted.**

Oil Pump (Cont'd)

INSTALLATION

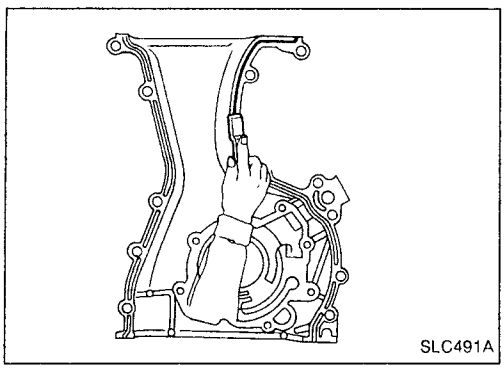

- Before installing front cover assembly, remove all traces of liquid gasket from mating surface using a scraper.
- Also remove traces of liquid gasket from mating surface of cylinder block.

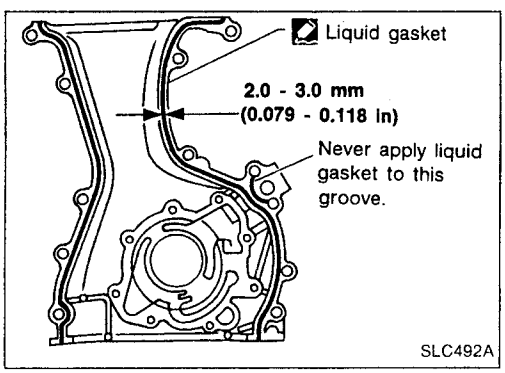

1. Apply a continuous bead of liquid gasket to mating surface of front cover assembly.
   - Use Genuine Liquid Gasket or equivalent.
2. Installation is the reverse order of removal.

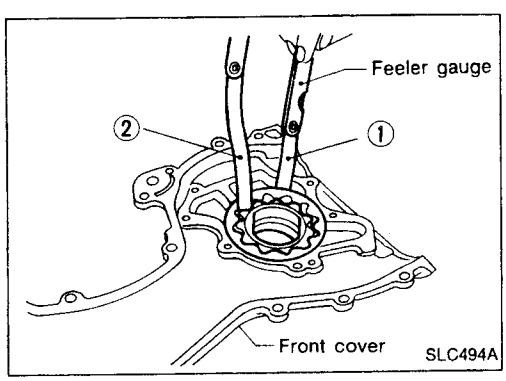

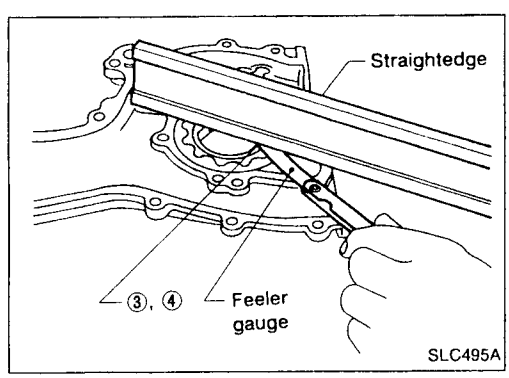

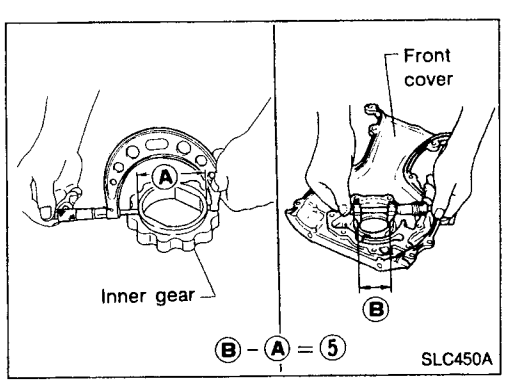

SLC860A

Oil Pump (Cont'd)

INSPECTION

Using a feeler gauge, check the following clearances:

Unit: mm (in)

Body to outer gear clearance ①	0.114 - 0.200 (0.0045 - 0.0079)
Inner gear to outer gear tip clearance ②	Below 0.18 (0.0071)
Body to inner gear clearance ③	0.05 - 0.09 (0.0020 - 0.0035)
Body to outer gear clearance ④	0.05 - 0.11 (0.0020 - 0.0043)
Inner gear to brazed portion of housing clearance ⑤	0.045 - 0.091 (0.0018 - 0.0036)

- **If the tip clearance (②) exceeds the limit, replace gear set.**
- **If body to gear clearances (①, ③, ④, ⑤) exceed the limit, replace front cover assembly.**

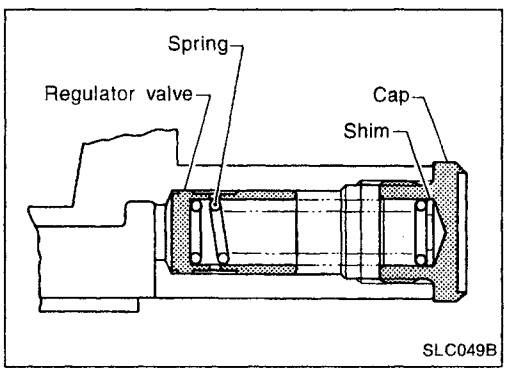

REGULATOR VALVE INSPECTION

1. Visually inspect components for wear and damage.
2. Check oil pressure regulator valve sliding surface and valve spring.
3. Coat regulator valve with engine oil.
   Check that it falls smoothly into the valve hole by its own weight.

If damaged, replace regulator valve set or oil pump cover.

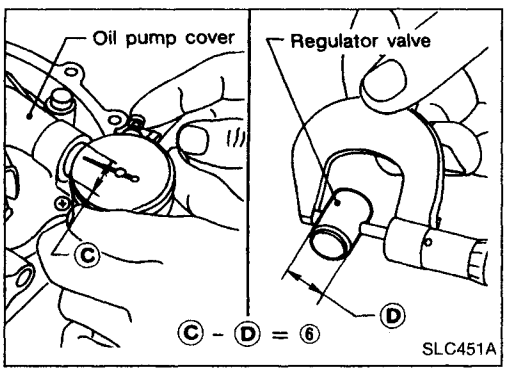

4. Check regulator valve to oil pump cover clearance.
   Clearance:
   ⑥ : 0.040 - 0.097 mm (0.0016 - 0.0038 in)

If it exceeds the limit, replace oil pump cover.

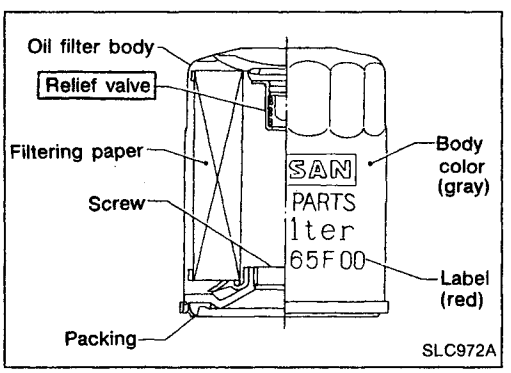

Oil Filter

The oil filter is a small, full-flow cartridge type and is provided with a relief valve.

- **The new and existing oil filter designs differ from each other and are not interchangeable.**
- **Use Tool KV10115801 for removing oil filter.**

Cooling Circuit

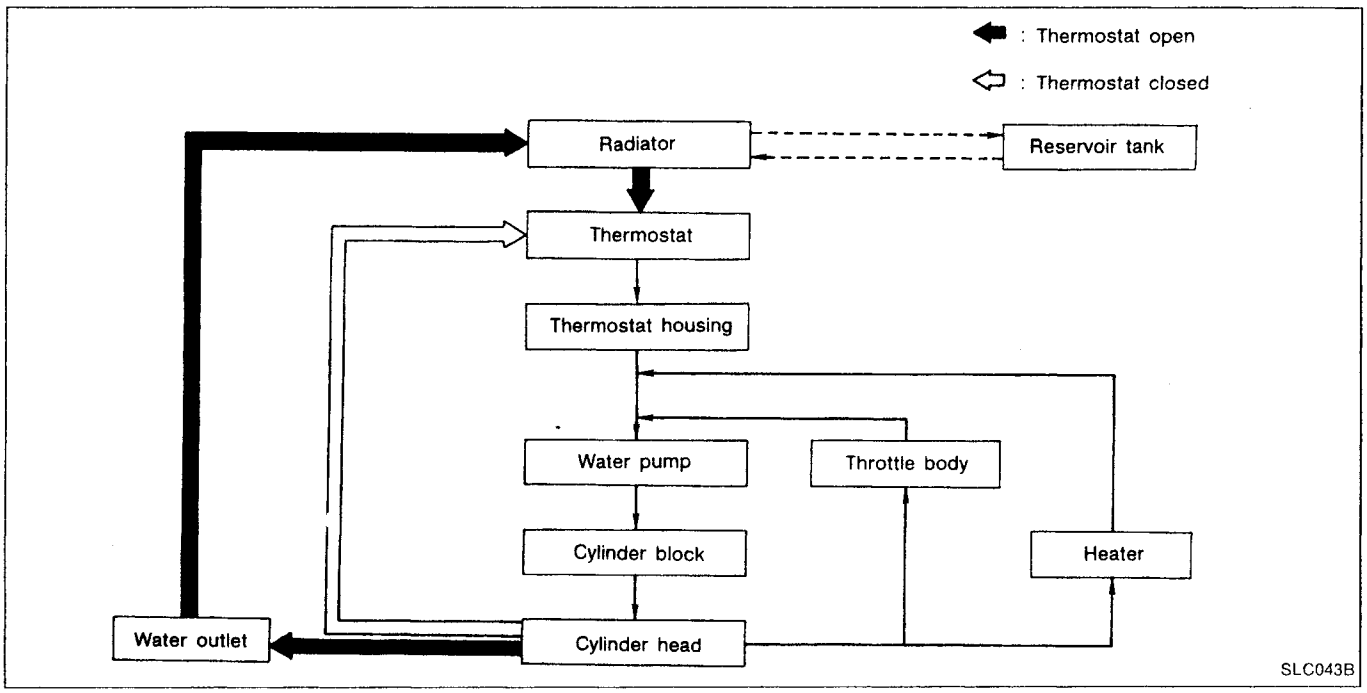

System Check

WARNING:
Never remove the radiator cap when the engine is hot; serious burns could be caused by high pressure fluid escaping from the radiator.
Wrap a thick cloth around the cap and carefully remove it by turning it a quarter turn to allow built-up pressure to escape and then turn the cap all the way off.

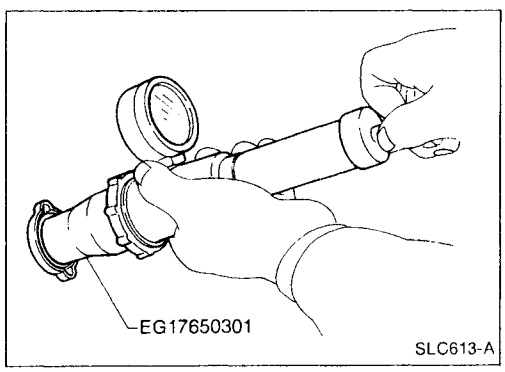

Cooling System Inspection

CHECKING HOSES

Check water hoses for proper attachment, leaks, cracks, damage, loose connections, chafing and deterioration.

CHECKING RADIATOR CAP

To check radiator cap, apply pressure to cap with a tester.

Radiator cap relief pressure:
- **Standard**
  - **78 - 98 kPa**
  - **(0.78 - 0.98 bar, 0.8 - 1.0 kg/cm^2, 11 - 14 psi)**
- **Limit**
  - **59 - 98 kPa**
  - **(0.59 - 0.98 bar, 0.6 - 1.0 kg/cm^2, 9 - 14 psi)**

Cooling System Inspection (Cont'd)

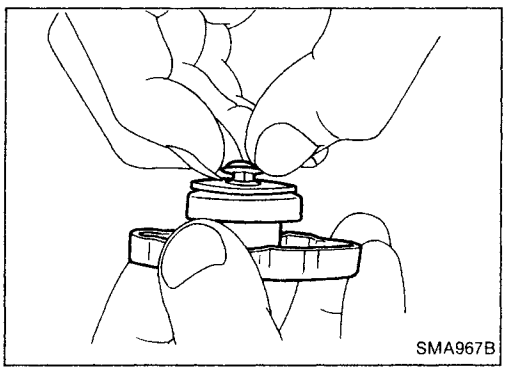

Pull the negative pressure valve to open it.
Check that it closes completely when released.

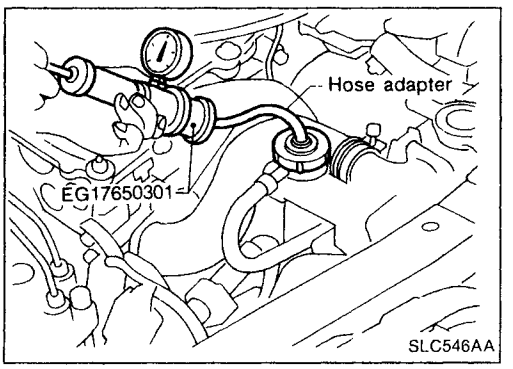

CHECKING COOLING SYSTEM FOR LEAKS

To check for leakage, apply pressure to the cooling system with a tester.

Testing pressure:
157 kPa (1.57 bar, 1.6 kg/cm^2, 23 psi)

CAUTION:
Higher than the specified pressure may cause radiator damage.

Water Pump

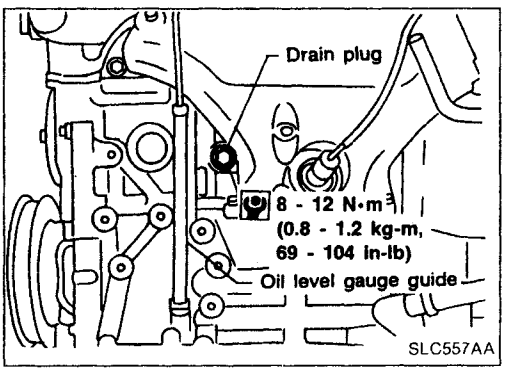

REMOVAL

1. Drain coolant from radiator.
2. Remove cylinder block drain plug located at left front of cylinder block and drain coolant.
3. Remove front RH wheel and engine side cover.
4. Remove drive belts.
5. Remove front engine mounting.

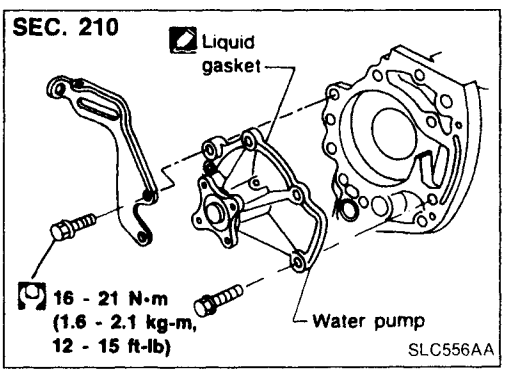

6. Remove water pump.

CAUTION:

- **When removing water pump assembly, be careful not to get coolant on drive belt.**
- **Water pump cannot be disassembled and should be replaced as a unit.**
- **After installing water pump, connect hose and clamp securely, then check for leaks using radiator cap tester.**

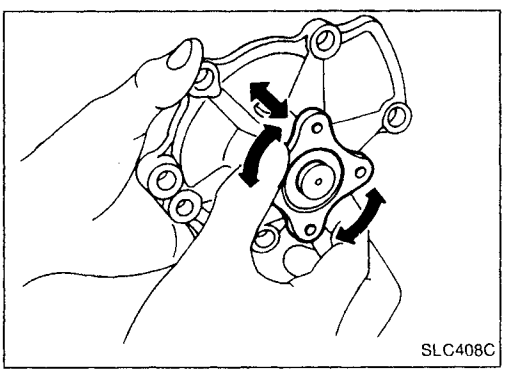

INSPECTION

1. Check body assembly for rust or corrosion.
2. Check for rough operation due to excessive end play.

Water Pump (Cont'd)

INSTALLATION

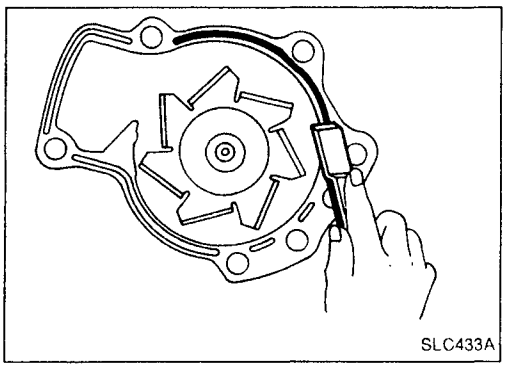

1. Before installing, remove all traces of liquid gasket from mating surface of water pump using a scraper.
- Also remove traces of liquid gasket from mating surface of cylinder block.

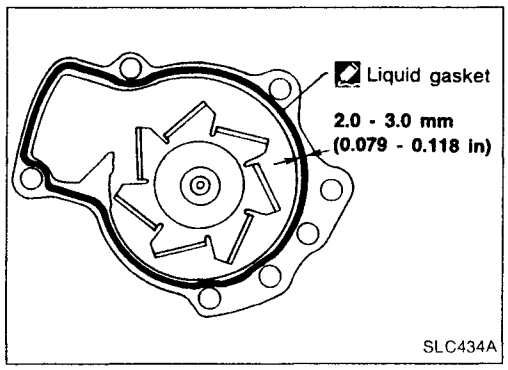

2. Apply a continuous bead of liquid gasket to mating surface of water pump.
- Use Genuine Liquid Gasket or equivalent.

Thermostat

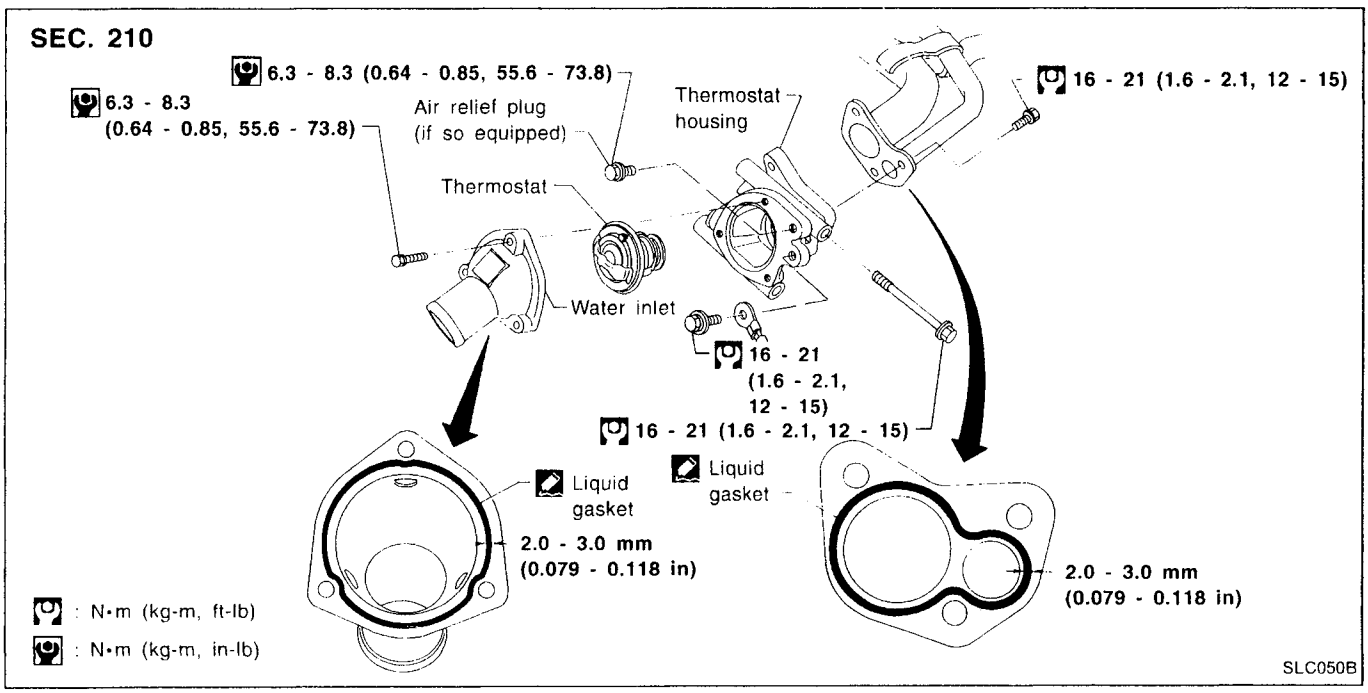

Thermostat (Cont'd)

REMOVAL AND INSTALLATION

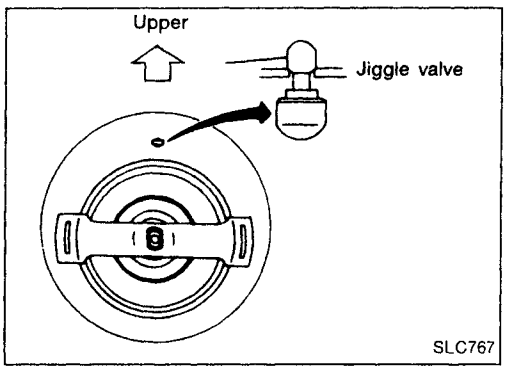

1. Drain engine coolant.
2. Remove lower radiator hose.
3. Remove water inlet, then take out thermostat.
4. Install thermostat with jiggle valve or air bleeder facing upward.

- **After installation, run engine for a few minutes, and check for leaks.**
- **Be careful not to spill coolant over engine compartment. Use a rag to absorb coolant.**

INSPECTION

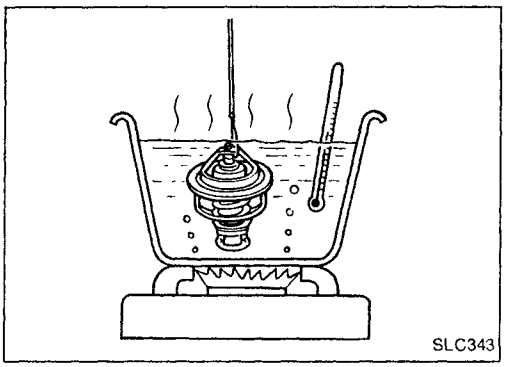

1. Check for valve seating condition at ordinary temperatures. It should seat tightly.
2. Check valve opening temperature and valve lift.

Valve opening temperature	°C (°F)	76.5 (170)
Valve lift	mm/°C (in/°F)	More than 8/90 (0.31/194)

3. Then check if valve closes at 5°C (9°F) below valve opening temperature.

Water Outlet

INSPECTION

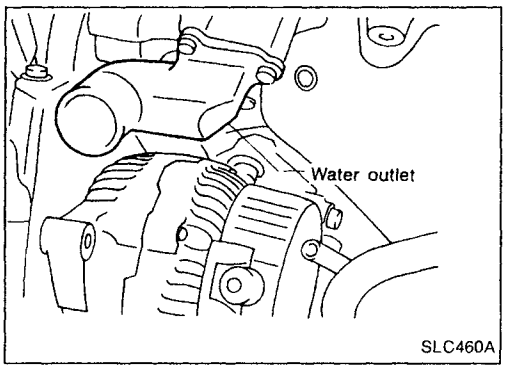

Visually inspect for water leaks. If there is leakage, apply liquid gasket.

INSTALLATION

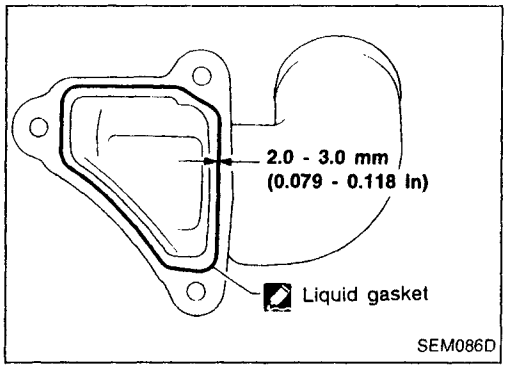

1. Before installing, remove all traces of liquid gasket from mating surface of water outlet using a scraper.

- Also remove traces of liquid gasket from mating surface of cylinder head.

2. Apply a continuous bead of liquid gasket to mating surface of water outlet.

- Use Genuine Liquid Gasket or equivalent.

Radiator

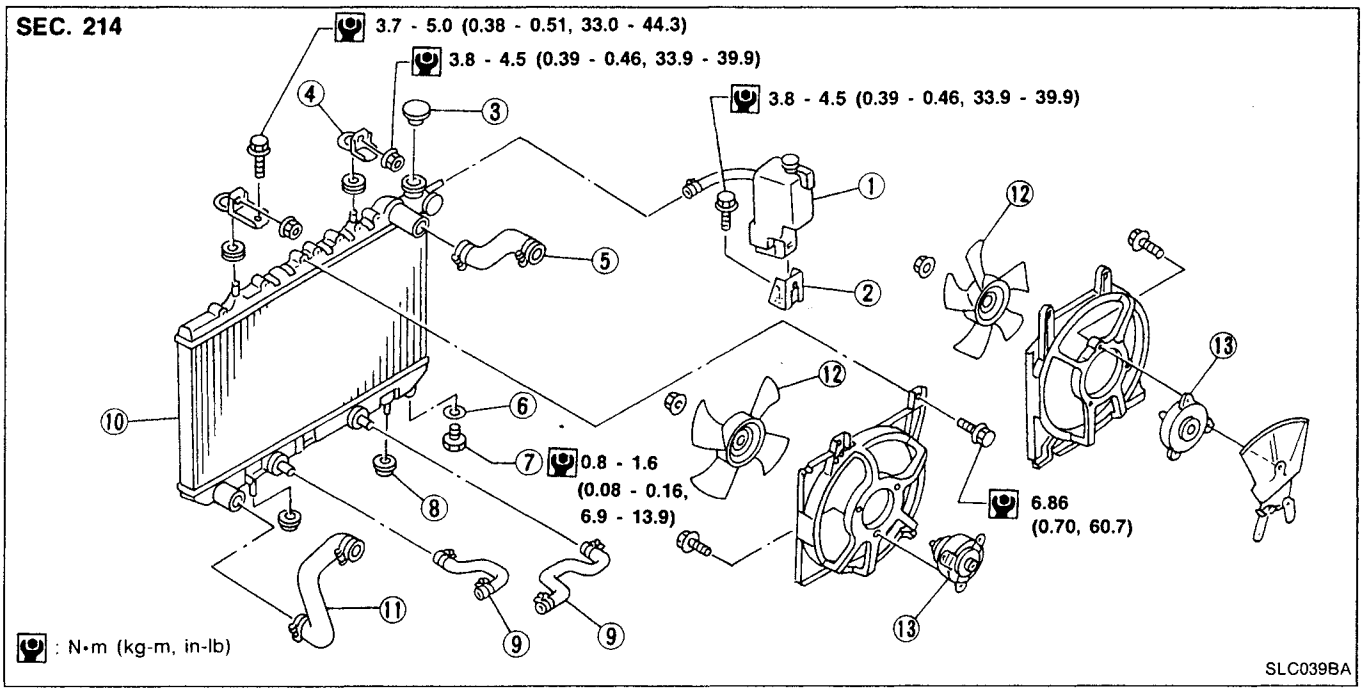

① Reservoir tank
② Reservoir tank bracket
③ Radiator cap
④ Mounting bracket
⑤ Upper hose
⑥ Washer
⑦ Drain plug
⑧ Mounting rubber
⑨ Oil cooler hose (A/T models)
⑩ Radiator
⑪ Lower hose
⑫ Cooling fan
⑬ Cooling fan motor

Cooling fan control system

- Cooling fans are controlled by the ECM. For details, refer to EC section ("Cooling Fan Control", "TROUBLE DIAGNOSES").

Refilling engine coolant

- For details on refilling engine coolant, refer to MA section ("REFILLING ENGINE COOLANT", "Changing Engine Coolant").

Lubrication Circuit

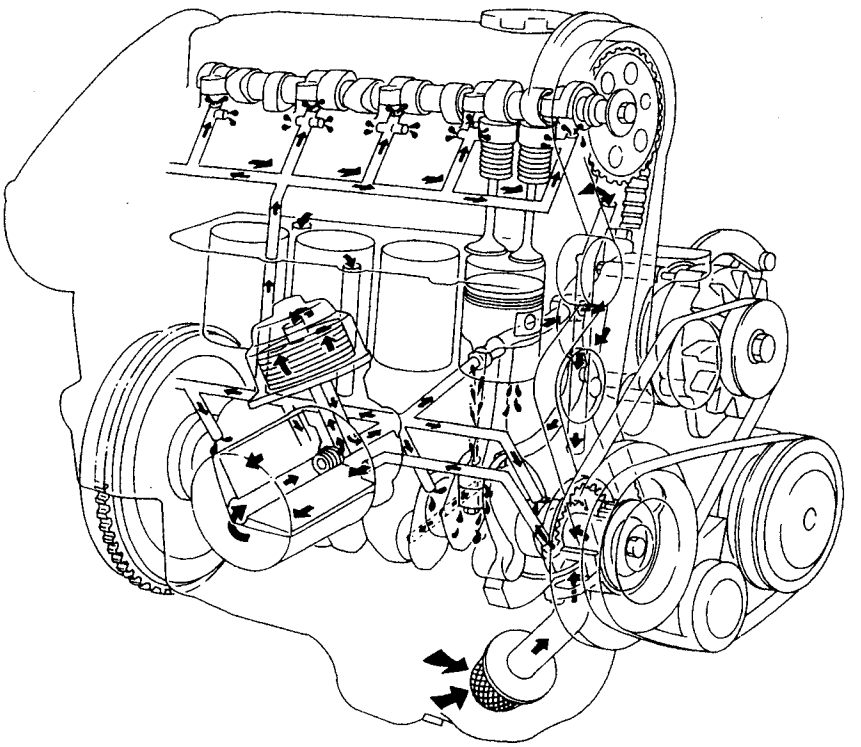

Note: : Oil gallery in cylinder block
: Oil passage
: By-pass passage

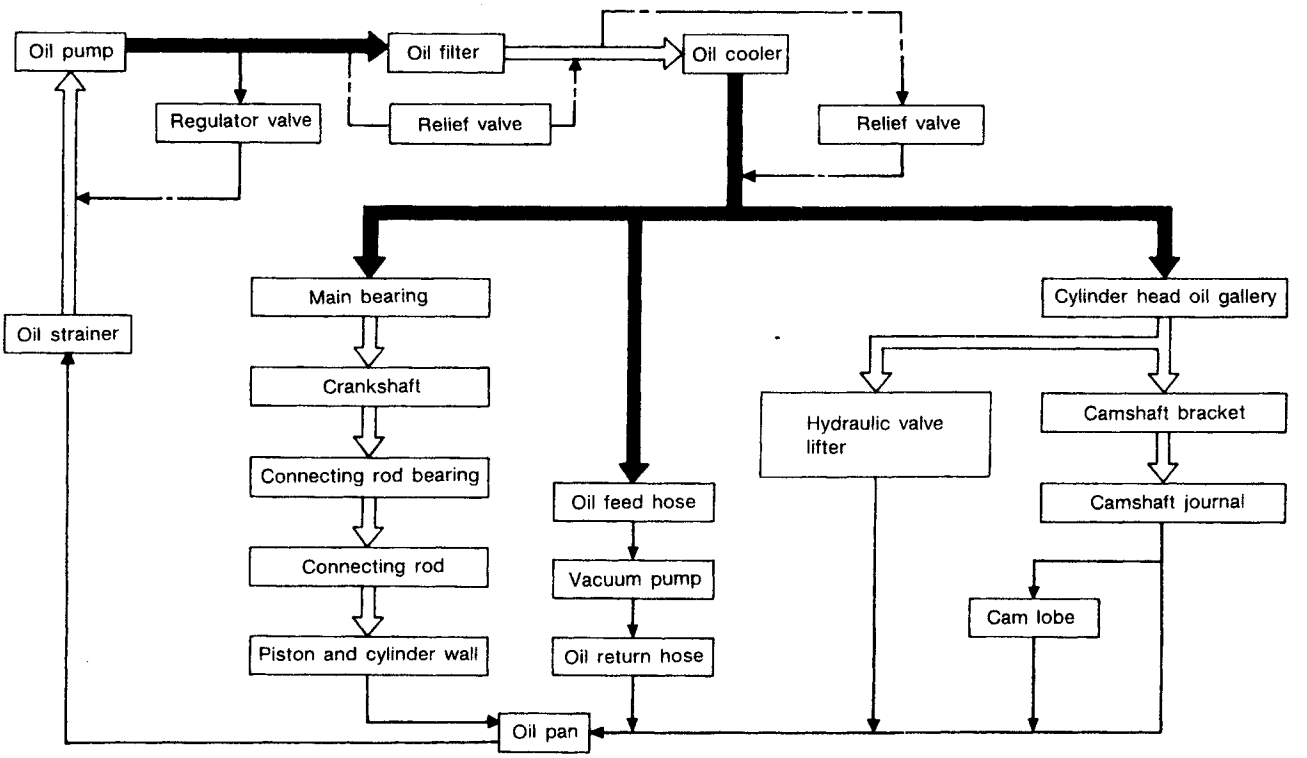

SLC609AA

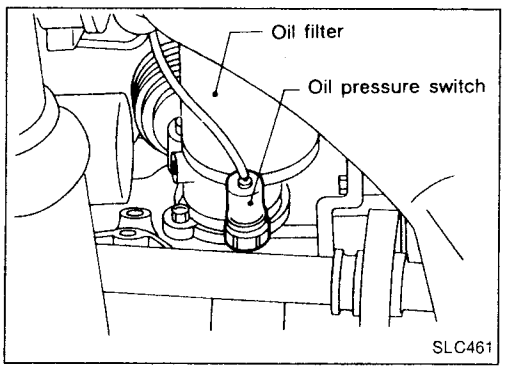

Oil Pressure Check

WARNING:

- **Be careful not to burn yourself, as the engine and oil may be hot.**
- **Oil pressure check should be done in "Neutral" gear position.**

1. Check oil level.
2. Remove oil pressure switch.

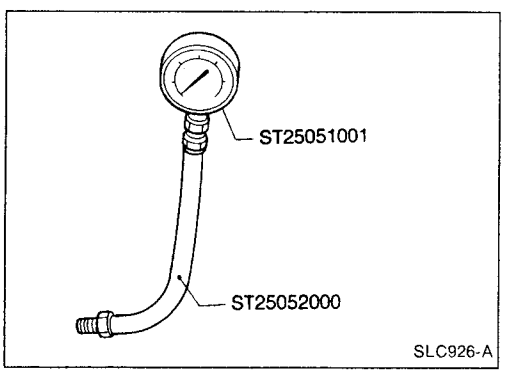

3. Install pressure gauge.
4. Start engine and warm it up to normal operating temperature.
5. Check oil pressure with engine running under no-load.

Engine rpm	Approximate discharge pressure kPa (bar, kg/cm^2, psi)
Idle speed	More than 59 (0.59, 0.6, 9)
2,000	294 (2.9, 3, 43)

If difference is extreme, check oil passage and oil pump for oil leaks.

6. Install oil pressure switch with sealant.

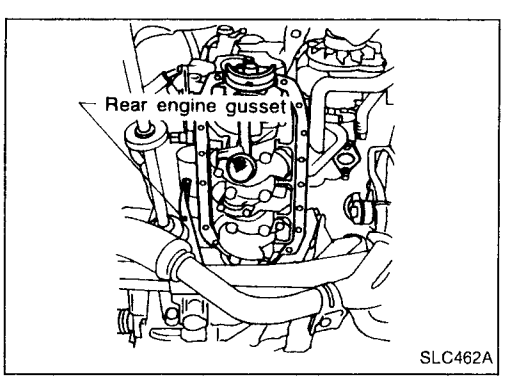

Oil Pump

REMOVAL AND INSTALLATION

1. Drain engine coolant and engine oil.
2. Remove upper radiator hose, drive belts, crank pulley, timing belt covers and timing belt.
3. Remove exhaust front tube, timing belt pulley and rear engine gusset (bar type), then remove oil pan.

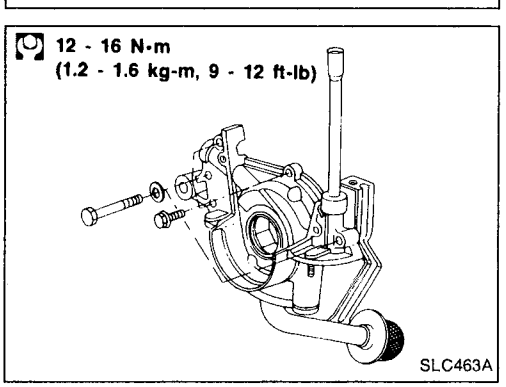

4. Remove oil pump assembly with oil strainer.
5. Reinstall any part removed. Refill engine oil and engine coolant.

- Apply liquid gasket to oil pump.
- Apply liquid gasket to oil pan.
- Apply liquid gasket to both ends of oil pan oil seals.
- Install oil pan, fitting oil seals in the correct position.

Oil Pump (Cont'd)

DISASSEMBLY AND ASSEMBLY

When installing oil pump, apply engine oil to inner and outer gears.

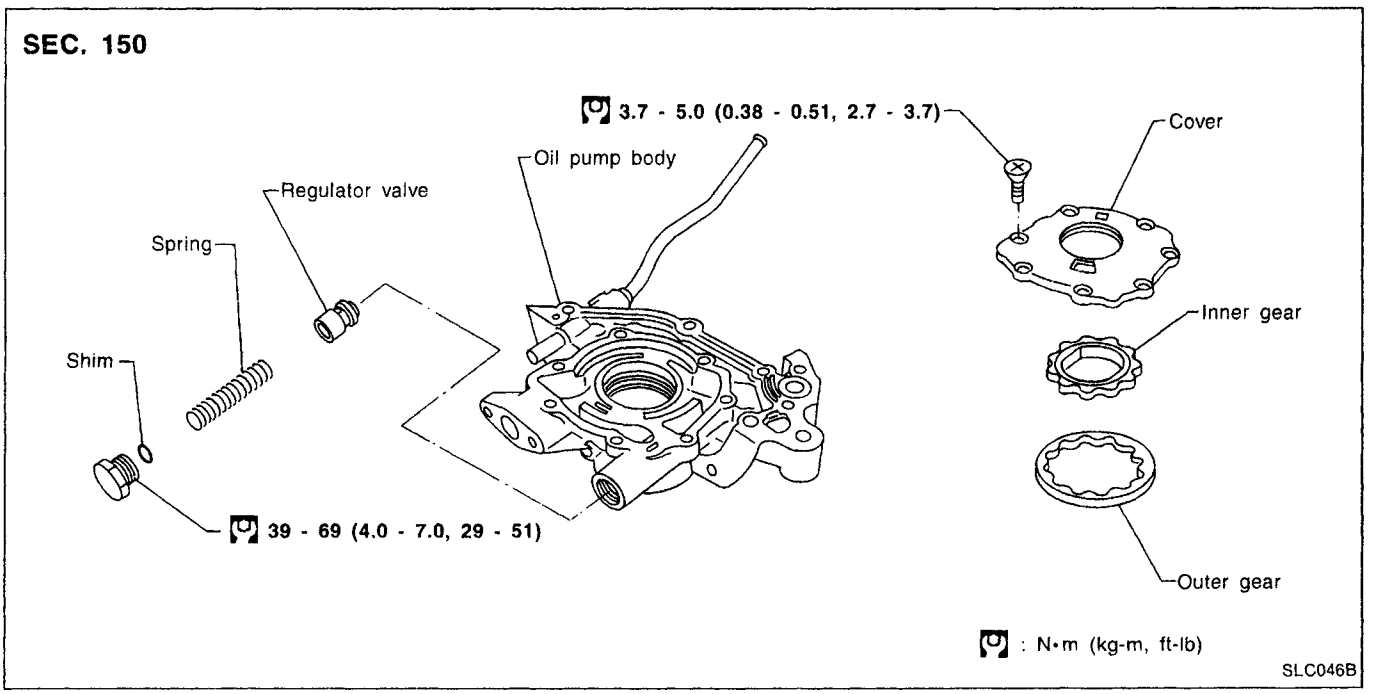

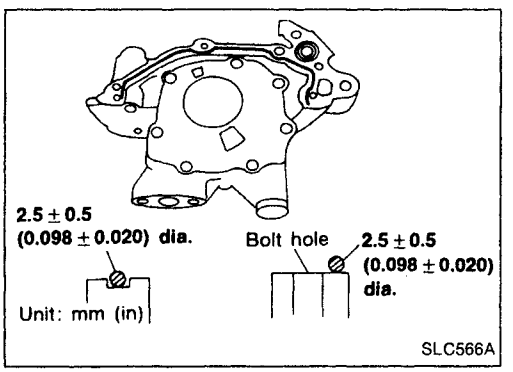

- Apply liquid gasket when installing oil pump onto engine.

Oil Pump (Cont'd)

INSPECTION

Using a feeler gauge, check the following clearances.

Unit: mm (in)

Body to outer gear clearance ①	0.12 - 0.20 (0.0047 - 0.0079)
Outer gear to inner gear clearance ②	less than 0.18 (0.0071)
Housing to inner gear clearance ③	0.05 - 0.09 (0.0020 - 0.0035)
Housing to outer gear clearance ④	0.05 - 0.11 (0.0020 - 0.0043)
Inner gear to housing clearance ⑤	0.05 - 0.09 (0.0020 - 0.0035)

If it exceeds the limit, replace gear set or entire oil pump assembly.

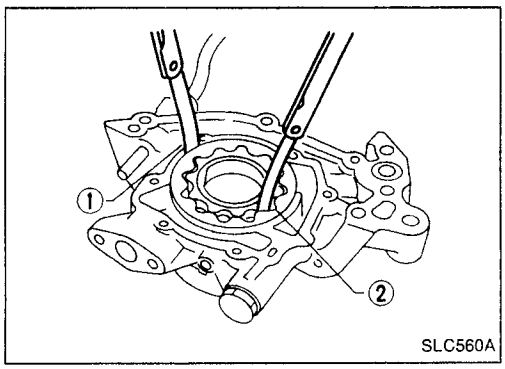

SLC560A

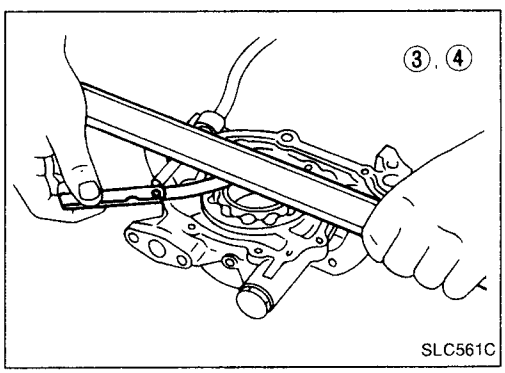

SLC561C

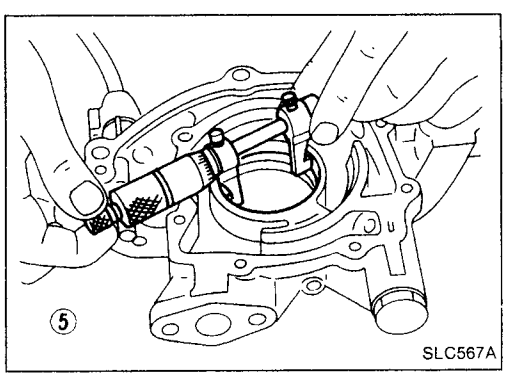

SLC567A

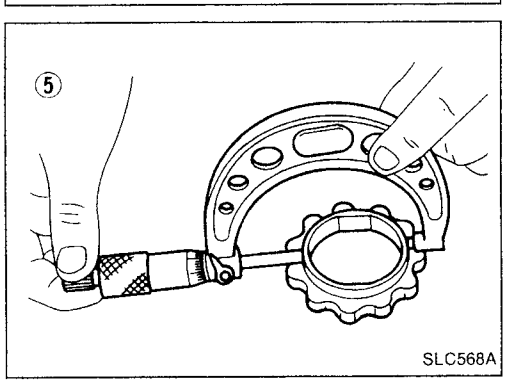

SLC568A

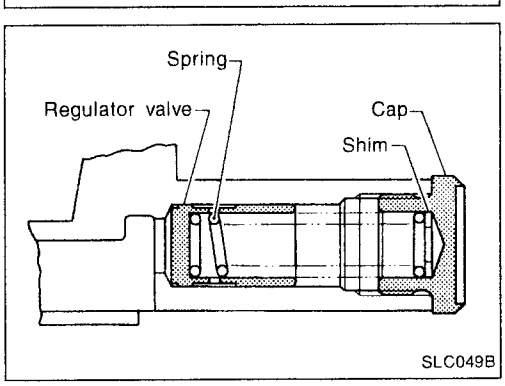

SLC049B

REGULATOR VALVE INSPECTION

1. Visually inspect components for wear and damage.
2. Check oil pressure regulator valve sliding surface and valve spring.
3. Coat regulator valve with engine oil. Check that it falls freely into the valve hole by its own weight.

If damaged, replace regulator valve set or oil pump assembly.

Oil Pump (Cont'd)

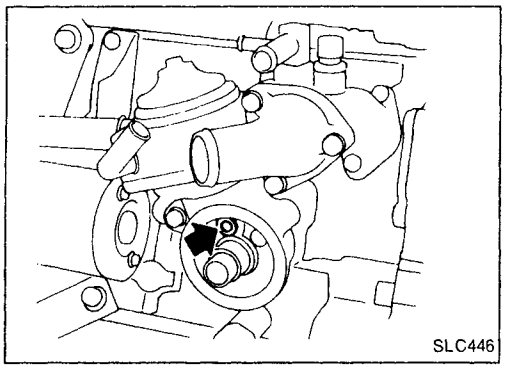

OIL PRESSURE RELIEF VALVE INSPECTION

Inspect oil pressure relief valve (indicated by arrow) for movement, cracks and breaks by pushing the ball. If replacement is necessary, remove valve by prying it out with a suitable tool. Install a new valve in place by tapping it.

Oil Cooler

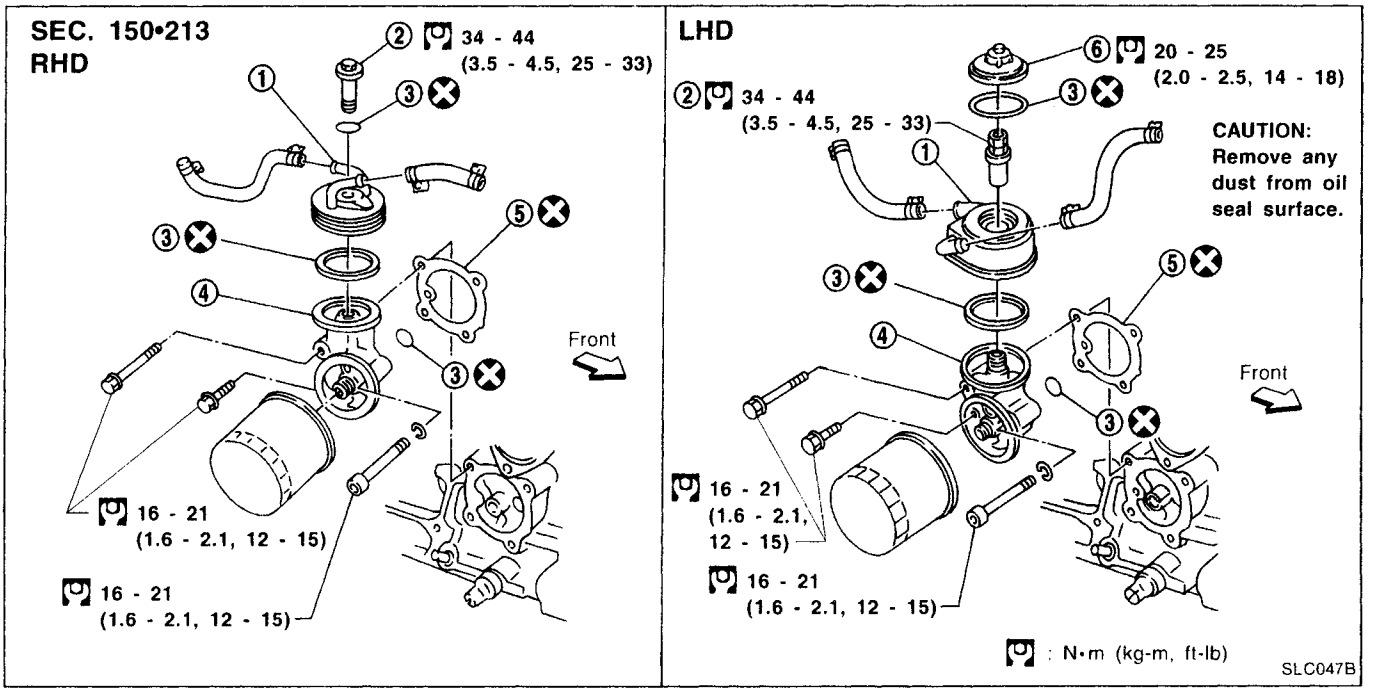

① Oil cooler
② Connector
③ O-ring
④ Oil filter bracket
⑤ Gasket
⑥ Cover

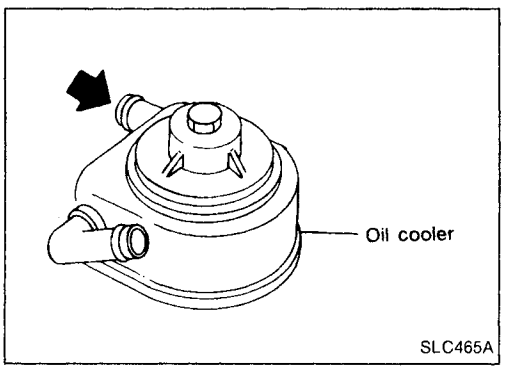

INSPECTION

1. Check oil cooler element and housing for cracks.
2. Check coolant inlet of oil cooler for clogging by blowing through it.
   Replace it if necessary.

Cooling Circuit

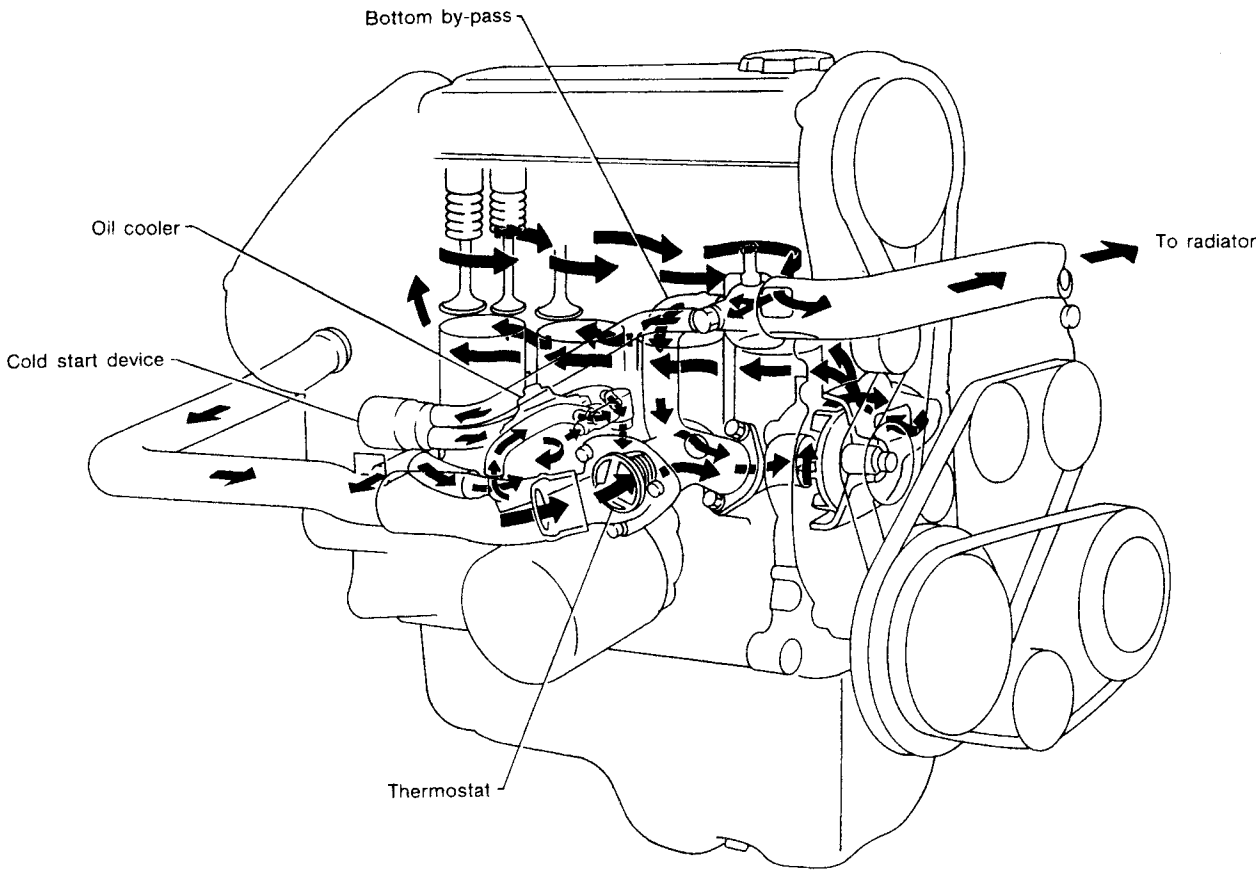

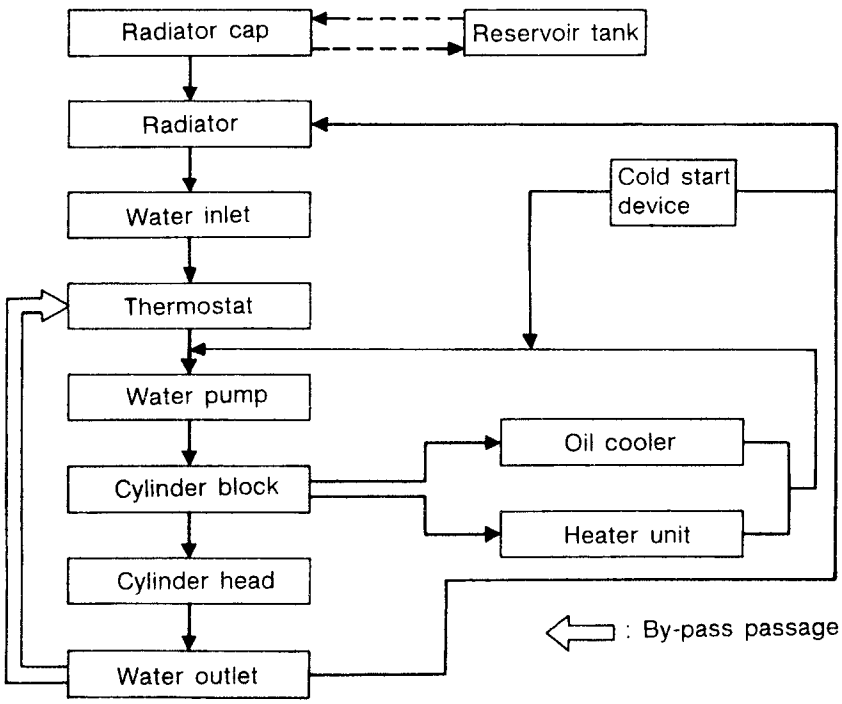

SLC407

System Check

WARNING:
Never remove the radiator cap when the engine is hot; serious burns could be caused by high pressure fluid escaping from the radiator.
Wrap a thick cloth around cap and carefully loosen it a quarter turn to release built-up pressure. Then remove the cap completely.

CHECKING COOLING SYSTEM HOSES

Check hoses for improper attachment, leaks, cracks, damage, loose connections, chafing and deterioration.

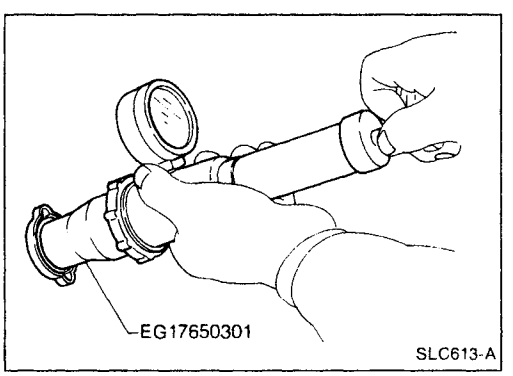

CHECKING RADIATOR CAP

To check radiator cap, apply pressure to cap with a tester.

Radiator cap relief pressure:
Standard
78 - 98 kPa
(0.78 - 0.98 bar, 0.8 - 1.0 kg/cm^2, 11 - 14 psi)
Limit
59 - 98 kPa
(0.59 - 0.98 bar, 0.6 - 1.0 kg/cm^2, 9 - 14 psi)

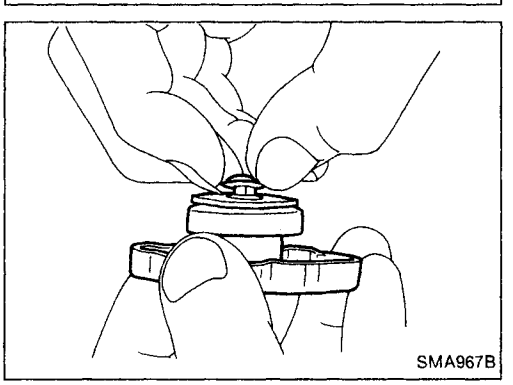

Pull the negative pressure valve to open it. Check that it closes completely when released.

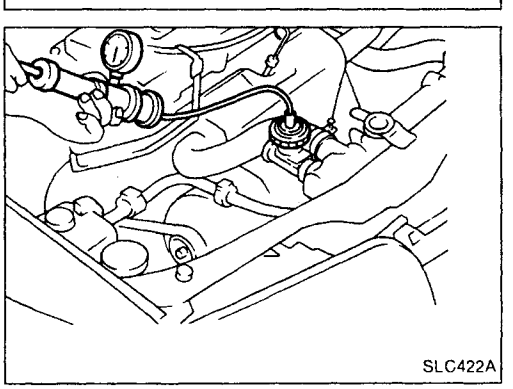

CHECKING COOLING SYSTEM FOR LEAKS

To check for leakage, apply pressure to the cooling system with a tester.

Testing pressure:
157 kPa (1.57 bar, 1.6 kg/cm^2, 23 psi)

CAUTION:
Higher than the specified pressure may cause radiator damage.

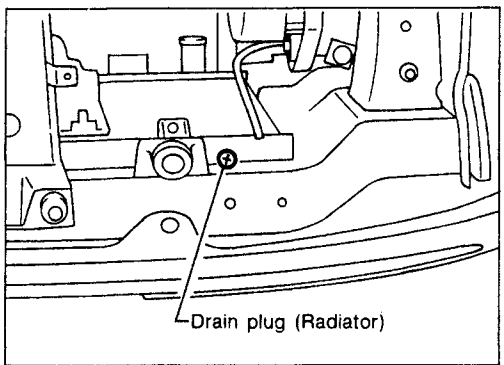

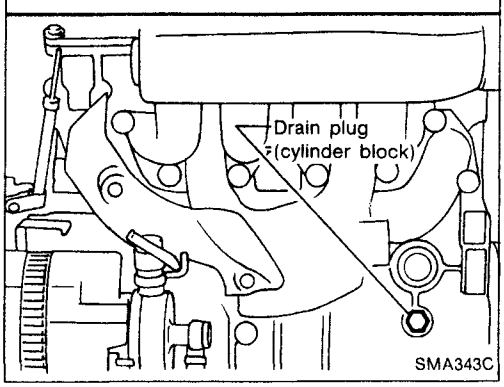

Water Pump

REMOVAL AND INSTALLATION

1. Drain engine coolant from radiator and cylinder block.
2. Remove upper radiator hose, timing belt covers, front engine mounting bracket and timing belt.
3. Remove timing belt tensioner and idler and timing belt lower back cover.

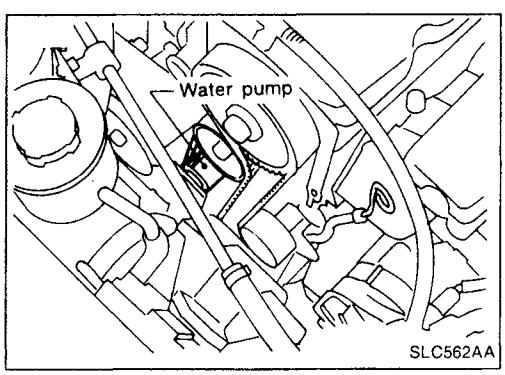

4. Remove water pump.

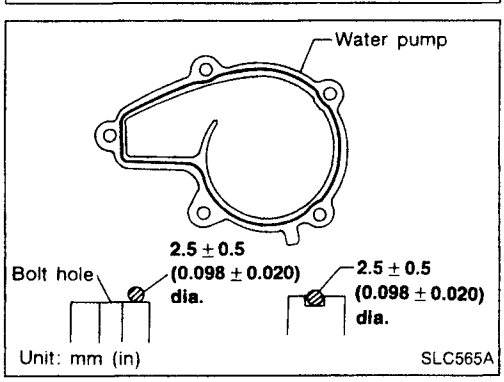

- For installation, apply liquid gasket to water pump as shown in the figure.

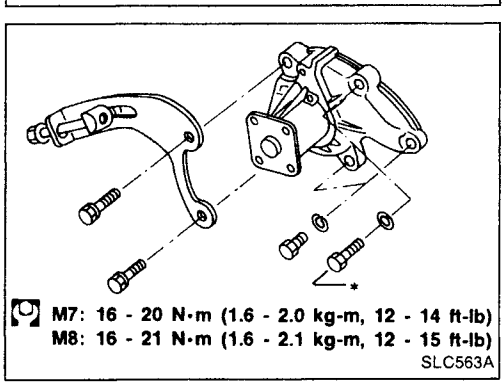

*: Apply liquid sealant to the thread.

Water Pump (Cont'd)

INSPECTION

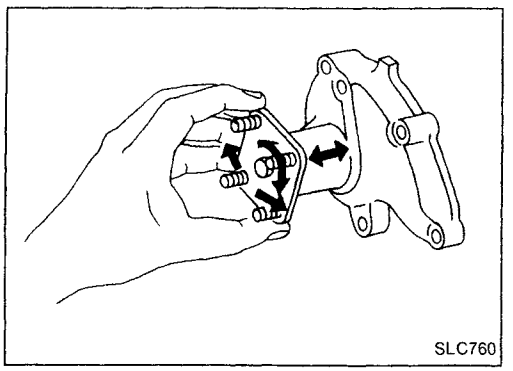

- Check body assembly for rust or corrosion.
- Check for rough operation due to excessive end play.

Thermostat

REMOVAL AND INSTALLATION

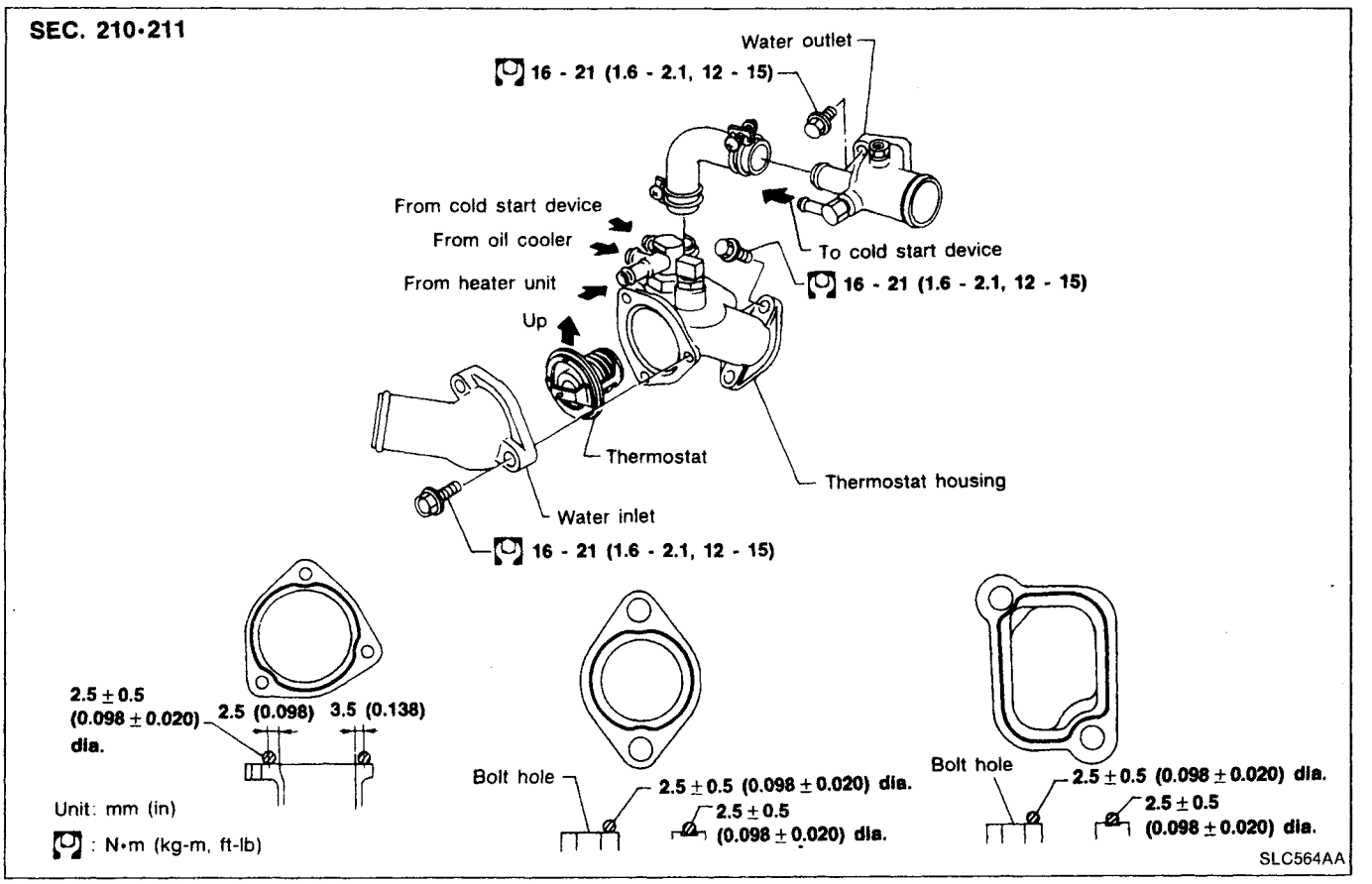

- Apply liquid gasket to water outlet, thermostat housing and water inlet.

Thermostat (Cont'd)

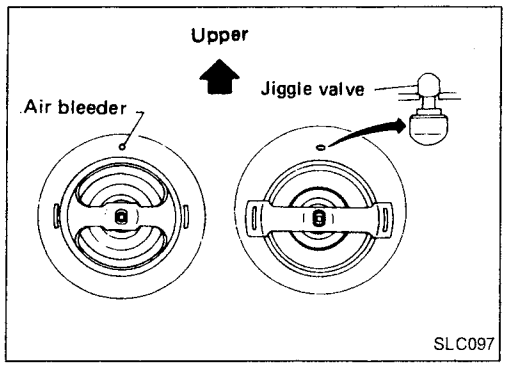

- Install thermostat with jiggle valve uppermost.
- **After installation, run engine for a few minutes, and check for leaks.**

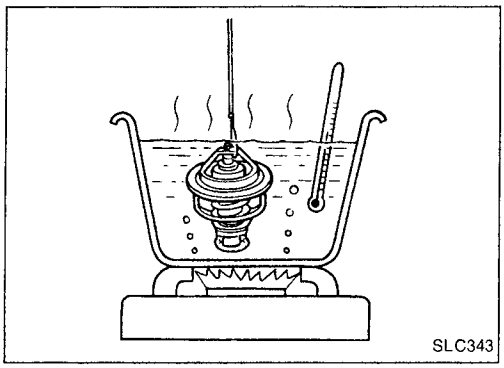

INSPECTION

1. Check for valve seating condition at ordinary temperatures. It should seat tightly.
2. Check valve opening temperature and valve lift.

Valve opening temperature	°C (°F)	88 (190)
Valve lift	mm/°C (in/°F)	More than 10/100 (0.39/212)

3. Then check if valve closes at 5°C (9°F) below valve opening temperature.

Radiator

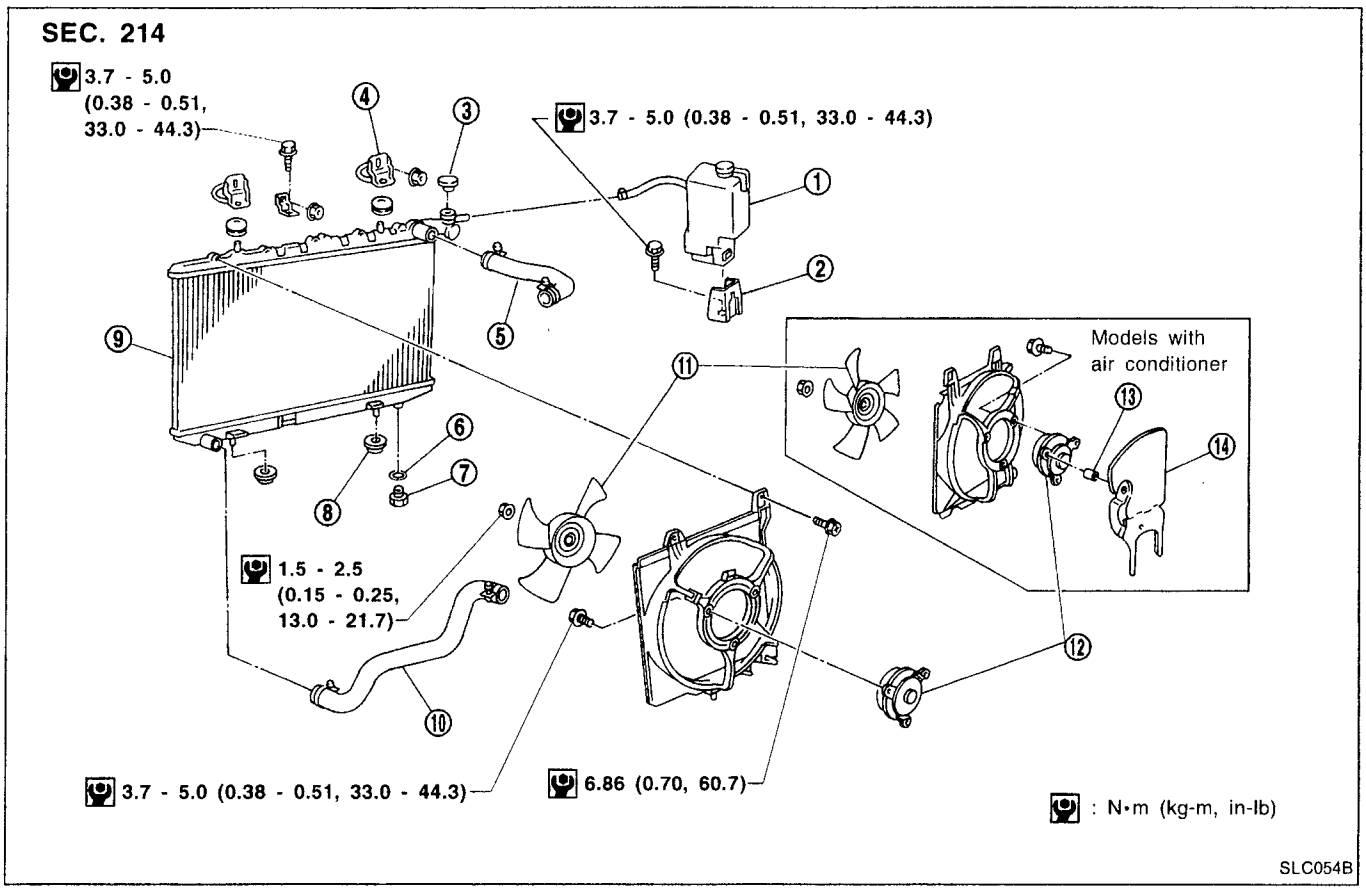

① Reservoir tank
② Reservoir tank bracket
③ Radiator cap
④ Mounting bracket
⑤ Upper radiator hose
⑥ Washer
⑦ Radiator drain plug
⑧ Mounting rubber
⑨ Radiator
⑩ Lower radiator hose
⑪ Cooling fan
⑫ Cooling fan motor
⑬ Shield spacer
⑭ Cooling fan motor shield

Radiator (Cont'd)

Cooling fan control system

- Cooling fans are controlled by the ECM. For details, refer to EC section ("Cooling Fan Control", "TROUBLE DIAGNOSES").

Refilling engine coolant

- For details on refilling engine coolant, refer to MA section ("REFILLING ENGINE COOLANT", "Changing Engine Coolant").

Radiator (Aluminum type)

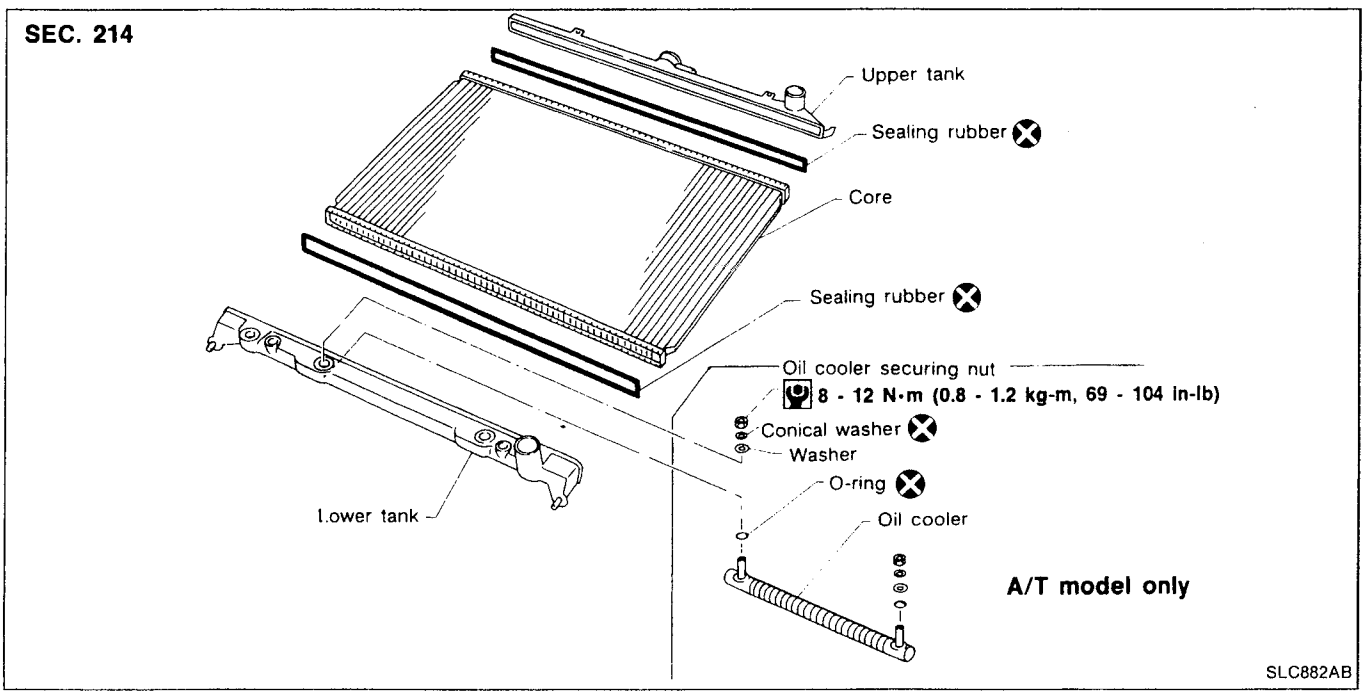

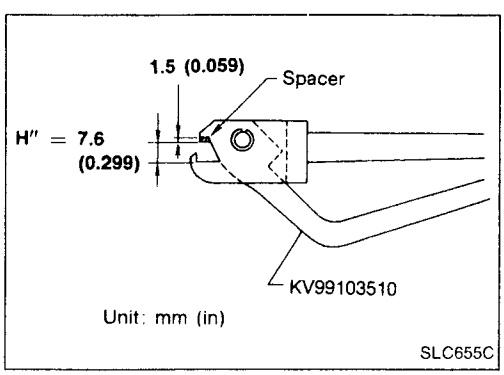

PREPARATION

1. Attach the spacer to the tip of the radiator plate pliers A. Spacer specification: 1.5 mm (0.059 in) thick x 18 mm (0.71 in) wide x 8.5 mm (0.335 in) long.
2. Make sure that when radiator plate pliers A are closed dimension H'' is approx. 7.6 mm (0.299 in).
3. Adjust dimension H'' with the spacer, if necessary.

- **If the radiator core rims cannot be crimped as specified, further modification of the radiator plate pliers A is required. Refer to the Technical Bulletin LC91-001.**

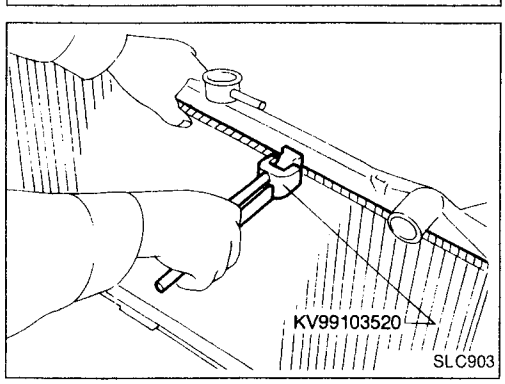

DISASSEMBLY

1. Remove tank with Tool.

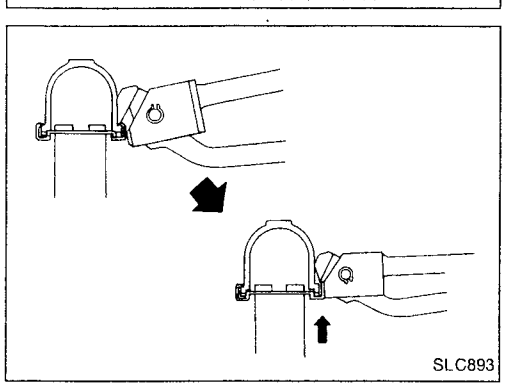

- Grip the crimped edge and bend it upwards so that Tool slips off.

Do not bend excessively.

Radiator (Aluminum type) (Cont'd)

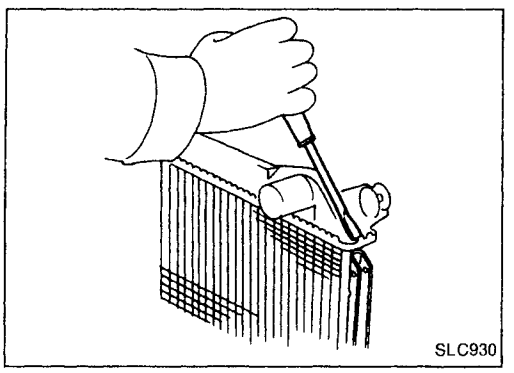

- In areas where Tool cannot be used, use a screwdriver to bend the edge up.

Be careful not to damage tank.

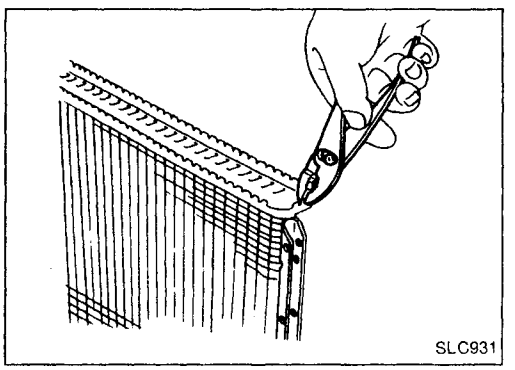

2. Make sure the edge stands straight up.
3. Remove oil cooler from tank. (A/T models only)

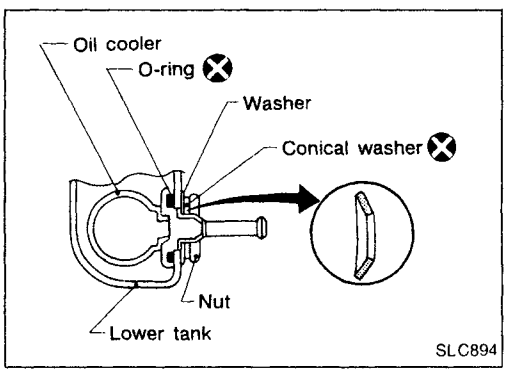

ASSEMBLY

1. Install oil cooler. (A/T models only)

Pay attention to direction of conical washer.

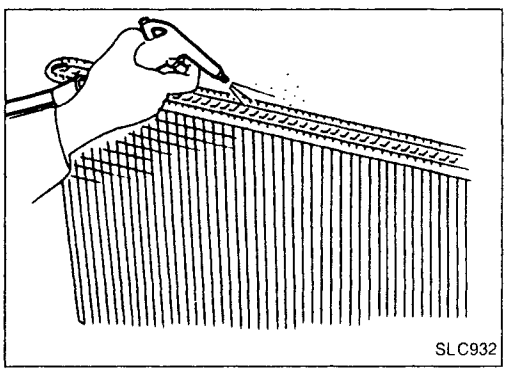

2. Clean contact portion of tank.

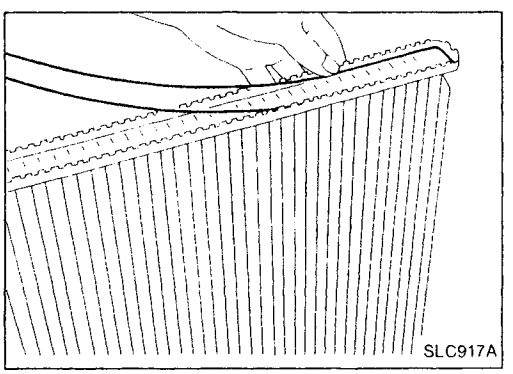

3. Install sealing rubber.

Push it in with fingers.
Be careful not to twist sealing rubber.

Radiator (Aluminum type) (Cont'd)

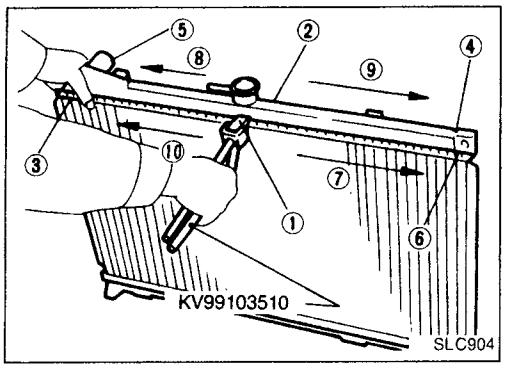

4. Caulk tank in specified sequence with Tool.

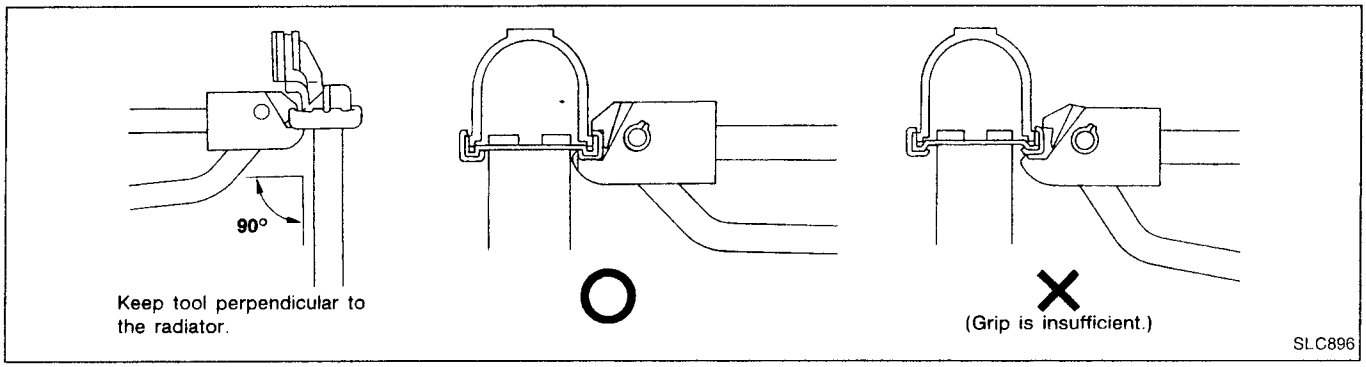

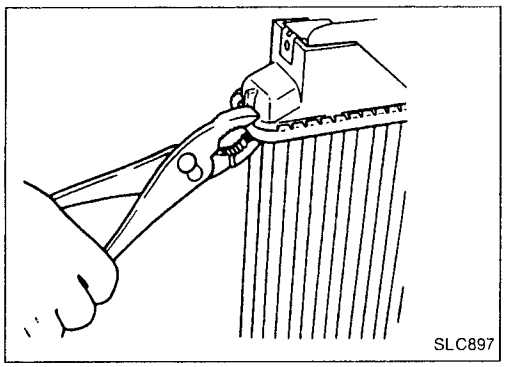

- Use pliers in the locations where Tool cannot be used.

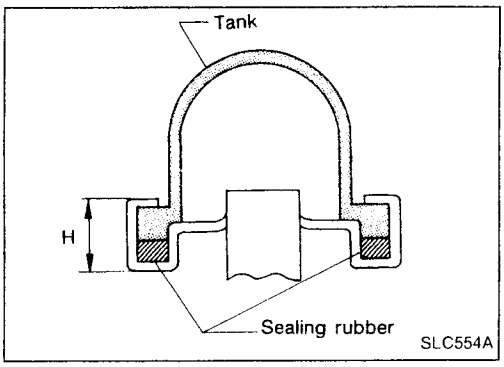

5. Make sure that the rim is completely crimped down.
   Standard height "H":
   8.0 - 8.4 mm (0.315 - 0.331 in)
6. Confirm that there is no leakage.

Refer to Inspection.

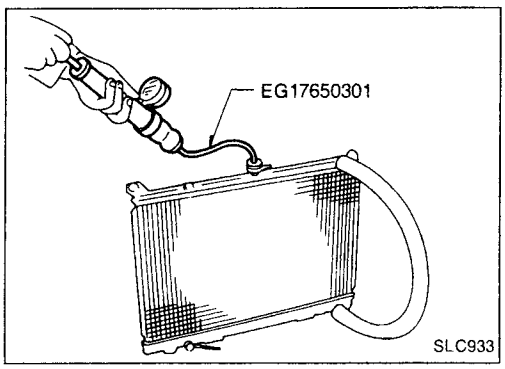

INSPECTION

Apply pressure with Tool.

Specified pressure value:
157 kPa (1.57 bar, 1.6 kg/cm^2, 23 psi)

WARNING:

To prevent the risk of the hose coming undone while under pressure, securely fasten it down with a hose clamp.
Attach a hose to the oil cooler as well. (A/T models only)

Engine Lubrication System (GA)

Oil pressure check

Engine speed rpm	Approximate discharge pressure kPa (bar, kg/cm^2, psi)
Idle speed	More than 59 (0.59, 0.6, 9)
2,000	More than 245 (2.45, 2.5, 36)
6,000	More than 422 (4.22, 4.3, 61)

Oil pump inspection

Unit: mm (in)

Body to outer gear clearance	0.110 - 0.200 (0.0043 - 0.0079)
Inner gear to crescent clearance	0.217 - 0.327 (0.0085 - 0.0129)
Outer gear to crescent clearance	0.21 - 0.32 (0.0083 - 0.0126)
Body to inner gear clearance	0.05 - 0.09 (0.0020 - 0.0035)
Body to outer gear clearance	0.05 - 0.11 (0.0020 - 0.0043)
Inner gear to brazed portion of housing clearance	0.045 - 0.091 (0.0018 - 0.0036)

Engine Cooling System (GA)

Thermostat

		Standard
Valve opening temperature	°C (°F)	76.5 (170)
Valve lift	mm/°C (in/°F)	More than 8/90 (0.31/194)

Radiator

Unit: kPa (bar, kg/cm^2, psi)

Cap relief pressure	Standard	78 - 98 (0.78 - 0.98, 0.8 - 1.0, 11 - 14)
	Limit	59 - 98 (0.59 - 0.98, 0.6 - 1.0, 9 - 14)
Leakage test pressure		157 (1.57, 1.6, 23)

Engine Lubrication System (SR)

Oil pressure check

Engine speed rpm	Approximate discharge pressure kPa (bar, kg/cm^2, psi)
Idle speed	More than 78 (0.78, 0.8, 11)
3,200	314 - 392 (3.14 - 3.92, 3.2 - 4.0, 46 - 57)

Regulator valve inspection

Unit: mm (in)

Regulator valve to oil pump cover clearance	0.040 - 0.097 (0.0016 - 0.0038)

Oil pump inspection

Unit: mm (in)

Body to outer gear clearance	0.114 - 0.200 (0.0045 - 0.0079)
Inner gear to outer gear tip clearance	Below 0.18 (0.0071)
Body to inner gear clearance	0.05 - 0.09 (0.0020 - 0.0035)
Body to outer gear clearance	0.05 - 0.11 (0.0020 - 0.0043)
Inner gear to brazed portion of housing clearance	0.045 - 0.091 (0.0018 - 0.0036)

Engine Cooling System (SR)

Thermostat

Valve opening temperature	°C (°F)	76.5 (170)
Valve lift	mm/°C (in/°F)	More than 8/90 (0.31/194)

Radiator

Unit: kPa (bar, kg/cm^2, psi)

Cap relief pressure	Standard	78 - 98 (0.78 - 0.98, 0.8 - 1.0, 11 - 14)
	Limit	59 - 98 (0.59 - 0.98, 0.6 - 1.0, 9 - 14)
Leakage test pressure		157 (1.57, 1.6, 23)

Engine Lubrication System

Oil pressure check

Engine rpm	Approximate discharge pressure kPa (bar, kg/cm^2, psi)
Idle speed	More than 59 (0.59, 0.6, 9)
2,000	294 (2.9, 3, 43)

Oil pump inspection

Unit: mm (in)

Body to outer gear clearance	0.12 - 0.20 (0.0047 - 0.0079)
Outer gear to inner gear clearance	Less than 0.18 (0.0071)
Housing to inner gear clearance	0.05 - 0.09 (0.0020 - 0.0035)
Housing to outer gear clearance	0.05 - 0.11 (0.0020 - 0.0043)
Inner gear to housing clearance	0.05 - 0.09 (0.0020 - 0.0035)

Engine Cooling System

Thermostat

Valve opening temperature °C (°F)	88 (190)
Valve lift mm/°C (in/°F)	More than 10/100 (0.39/212)

Radiator

Unit: kPa (bar, kg/cm^2, psi)

Cap relief pressure	Standard	78 - 98 (0.78 - 0.98, 0.8 - 1.0, 11 - 14)
	Limit	59 - 98 (0.59 - 0.98, 0.6 - 1.0, 9 - 14)
Leakage test pressure		157 (1.57, 1.6, 23)